Catalogue 2020
Hardware & Safes

Protect what matters with **Yale** security solutions

An ASSA ABLOY Group brand

ASSA ABLOY

The world's favorite lock since **1843**

About Yale

Linus Yale

Created in 1843, Yale is one of the oldest international brands in the world and probably the best-known name in the locking industry. The Yale history captures major innovations that have marked the evolution not just of Yale, but of the entire locking industry.

At Yale, we take great pride in our beginnings. Everything we are today, we owe to the inspirational ingenuity of Linus Yale Senior and Linus Yale Junior.

Yale is a part of the ASSA ABLOY Group. At ASSA ABLOY, we believe that freedom enriches people and that fear makes us poorer. To realize freedom, we must firstly feel safe and secure. That's why the ASSA ABLOY Group of companies is committed to creating high quality door opening solutions.

1843 – First Lock Patent from Linus Yale Sr. (Combination Lock, US3312).

1844 – Patent from Linus Yale Sr. for a door lock (US3630) with circular pin tumblers.

1847 – Linus Yale Sr. built a small lock factory in Newport, USA.

1850 – Linus Yale Sr.'s son joined his father in the business.

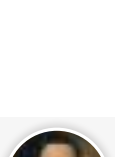

1851 – Yale patented his design for the famous pin tumbler cylinder padlock - still used around the world today.

Yale patented a safety lock for use in banks.

1857 – Granted patents between 1857 and 1865, Yale finally succeeded in creating his most important invention – the Yale cylinder lock. (June 27, 1865, US patent 48475 - round cylinder with five pin tumblers in a line and flat key) Linus Yale Jr. transformed the locking industry forever with his many breakthrough inventions.

1857-65 – Relying on Yale patents, Yale's sterling name, and his native ingenuity, Linus Yale Junior and his colleague, Henry Towne, established the Yale & Towne Company in Stanford, Connecticut, at the time employing 35 people.

1868 – After the death of Linus Yale Junior, his son, John B. Yale, joined Henry Towne and helped grow the company from a small shop into a giant manufacturing enterprise.

1879 – A line of padlocks was introduced.

YALE PIN TUMBLER PADLOCK.

1894 – Yale & Towne established a sales branch in Britain (first British plant).

1903 – Towne began stamping the name Yale on the padlocks.

1843-2019

STILL PIONEERING

Yale is the brand behind locks of every design and function in over 125 countries, since more than 175 years.

All over the world, people are actively securing all they care about; their home, their family, their personal belongings or their business with the name they trust the most, Yale. That's why we proudly say that Yale is **"the world's favorite lock".**

Our overall aim is to make our customers feel so safe and secure that they are free to enjoy their life fully, free of worries and free to choose what they want to do.

1929 — Yale purchased the UK largest lock maker H. & T. Vaughan Ltd.

20TH C — By the early 20th century, they employed more than 12,000 staff and had expanded into the wider world. Throughout the 20th century purchases, acquisitions and joint ventures with brands as Guli, Parkes and C E Marshall have made Yale locks Well-known worldwide.

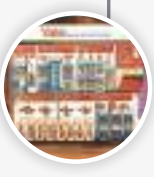

1963 — Eaton acquired Yale & Towne Manufacturing Co.

1991 — Williams Holdings acquires Yale.

2000 — In August 2000 Yale was purchased by the ASSA ABLOY Group - the world's leading lock group.

2005 — Yale became a global brand.

2010 — Launch of the first Smart Door Lock in EMEA – Keyfree, for the UK market.

2011 — Launch of Doorman in Scandinavia which is the start of a success story for our Smart Door Lock products.

2016 — Yale Smart Living range is launched in various countries across EMEA. Yale Smart Living is an ingredient brand gathering our range of connected products. It is a range of connected, smart security devices such as alarms and digital door locks and viewers that allow you to protect your home and loved ones from almost anywhere in the world through intuitive user-friendly apps.

2018 — Launch of CCTV in EMEA, part of the Yale Smart Living ecosystem.

Yale in the Middle East 1940-2019

About Yale Middle East

Yale ME is the market leader in residential security solutions and offers an extensive range of products catering to the varied demands of the market. The products are handpicked from millions of product combinations globally, ranging from mechanical locks, smart products like alarms and cameras to door solutions and connected smart locks; and adapted to meet the diverse needs of consumers across the Middle East region. Yale first set foot in the Middle East with Lebanon in 1940, and today, has physical presence in 14 countries through some of the region's top distributors, and online presence with key ecommerce accounts.

Lebanon

Activation

1940

Syria

Activation

1955

Lebanon

American University

1960

Lebanon

Lebanon University

1961

Lebanon

La Societe Des Grands Hotels Du Liban

1964

Iran

Activation

1969

Kingdom of Saudi Arabia

Activation

1970

Yale ME not only offers its customers high quality products, but also ensures they enjoy an excellent after-sales experience. With an expert team of professionals trained on the latest products and technology, and a warranty period of 1-10 years across its products, Yale aims to instill trust and a sense of security for its consumers across the region, as these values are at the core of what we do.

Our customer care team is always available at your service – please call our toll free number for any assistance on Yale products.

800 YALE (9253) (UAE)

00971 800 9253 (International)

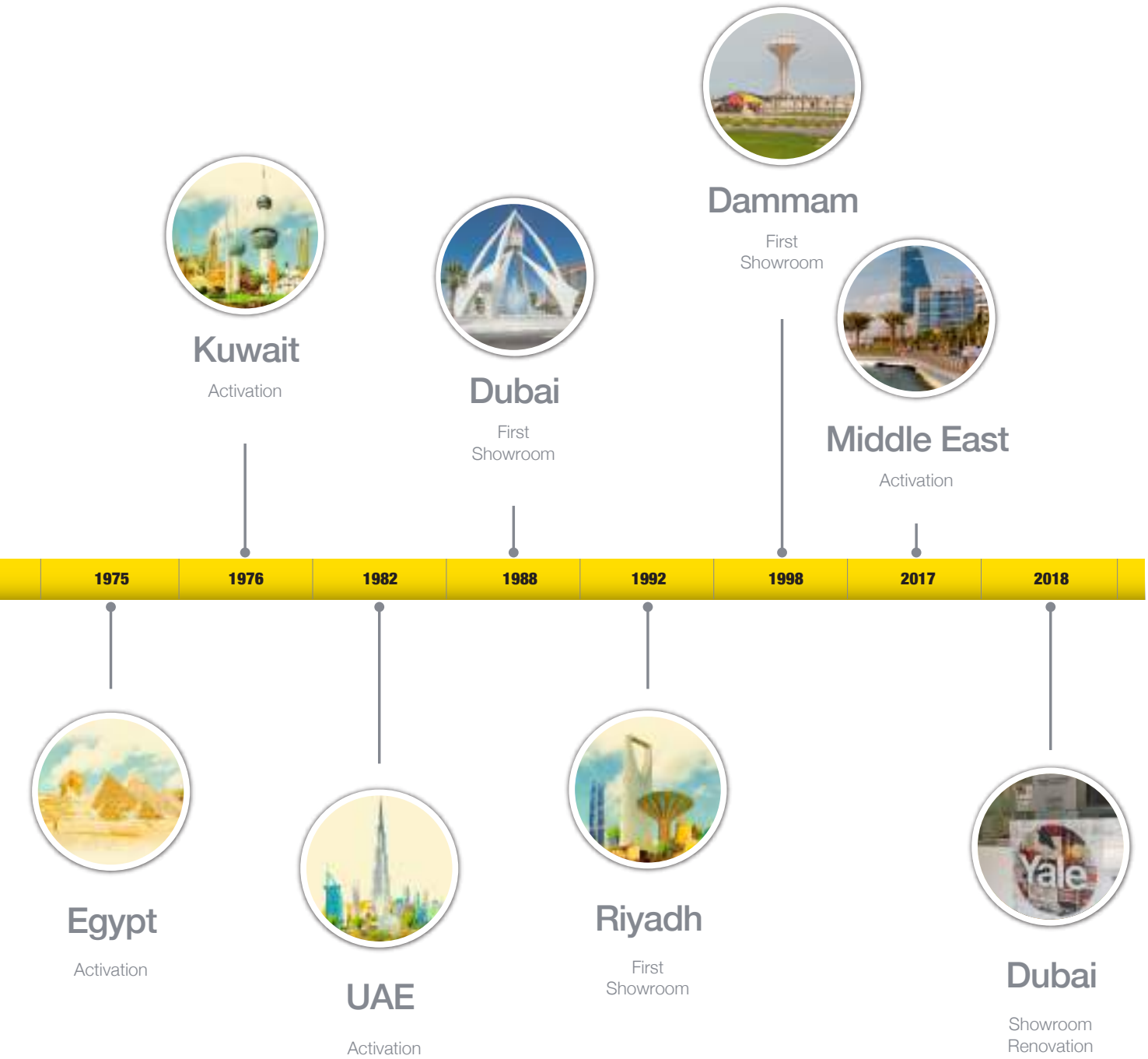

Table of Contents

Hinges

10-23

Information 12-21

Hinges.....22-23

Door Closers

24-50

Information 26-44

300 Series.....45

3000 Series.....46

4000 Series.....47

5000 Series.....48

7000 Series.....49

722 Series.....50

Lever Handles

52-67

Decorative Stainless Steel Handles.....54-60

Stainless Steel Handles 61-62

Lever Handles with Rosette 63-65

Handles for Alum. and PVC Doors.....66-67

Pull Handles

68-73

Stainless Steel Handles 70-73

Mortice Locks

74-113

Information 76-81
H Series Locks 82-86
C Series Locks 87-91
52x Series 92
510/520 Series.....93-94
521 Series.....95
522 Series.....96
Classica Locks 97-98
Bathroom Locks.....99
Cross Cylinder Locks.....100-101
Mortice Lever Locks 102-103
Narrow Stile Locks 104-106
Aluminium Locks 107
Electric Mortice Locks 108-109
Electrical Contacts.....110-113

Rim Locks

114-125

Mechanical Rim Locks.....116-121
Robin Lever Locks.....122-123
Push Button Locks.....124-125

Nightlatches

126-131

Nightlatches 128-131

Electric Rim Locks

132-147

Electric Rim Locks.....134-147

Table of Contents

Knobs and Handlesets

148-155

Cylindrical Knobsets 150-152

Security Deadbolts 153

Decorative Handle Knobsets 154-155

Cylinders

156-190

Information 158-163

1500 Series 164-167

1000 Series 168-175

500 Series 176-184

210 Series 185-186

214 Series 187-188

215 Series 189

212 Series 190

1152 Series 191

Padlocks

192-215

Information 194-195

Brass padlocks.....196-198

Armored padlocks 199-200

Commercial padlocks.....201-203

Combination padlocks.....204-206

Travel padlocks.....207-211

Novelty padlocks 212-213

Other padlocks & hasps 214

Keys 215

Panic Exit Devices

216-225

Surface Mounted P.E. Devices.....218-220

Accessories for P.E. Devices.....221-225

Door Accessories

226-241

Door Stops.....228-229
Flush Bolts 229-230
Signage.....231-232
Escutcheons 233
Bathroom Accessories 234-235
Door Bolts & Guards.....236-237
Door Viewers.....238
Door Chains & Holders 239
Other Fittings.....240-241

Cabinet Locks

242-251

Locks for Wooden Wardrobes and Drawers.....244-246
Universal Cylinders for Metal Cabinets 247-251

Safes

252-268

Fire Safes 254-257
Certified Safes 258-260
Security Safes 260-262
Value Safes.....262-264
Guest Safes.....265-266
Motorized Safes 266
Tablet Safes.....267
Wall Safes.....267
Cash & Key Boxes.....268

Door Hinges

Door Direction

Depending on the pivot direction of a door, a door is classified as a left and right hand door. The door direction or side definition is according to the German standard DIN 107. Please note that this standard is different as compared to ANSI definition for left and right hand. Visible position of the door hinges on the left = DIN left Visible position of the door hinges on the right = DIN right. Furthermore, common definitions derived from the access direction.

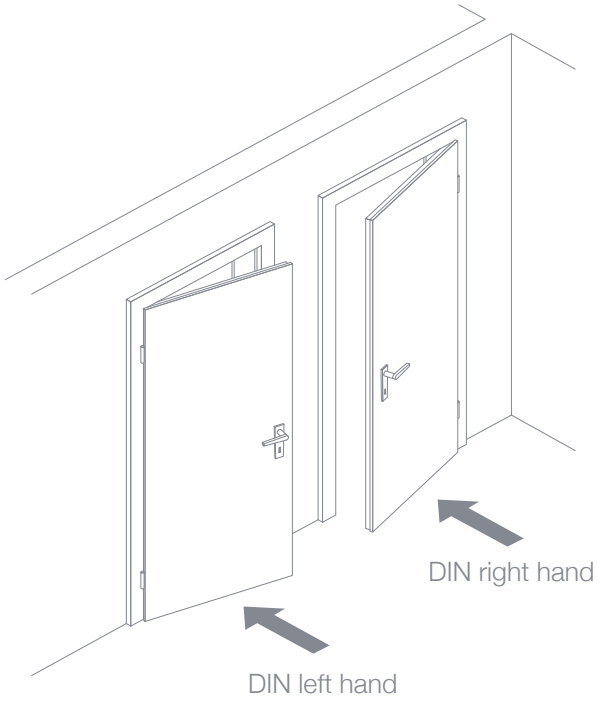

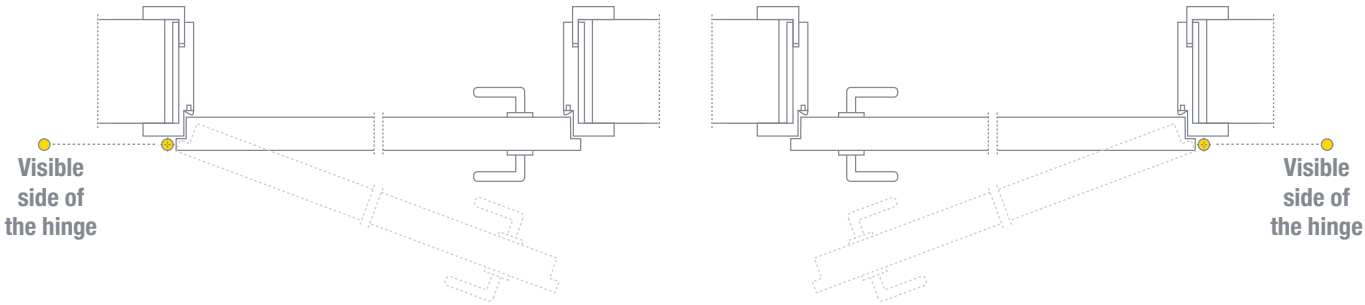

DIN LEFT **DIN RIGHT**

Hinge Position Recommendation

In the ENstandard for hinges (EN1935:2002) it is not specified where a hinge has to be fixed exactly. The recommendation shown below is only a guide and should be proved always as per the door specifications.

- Figure 1 – Use for medium weight doors. The benefit of this solution is that door will be held straight and wont warp.
- Figure 2 – Use for higher weight doors. This alternative is recommended when door closing device is fixed on the door.
- Figure 3 – Use for door height over 2,100mm. This solution is for constructions with a high risk of door warping.
- Figure 4 – Use for door height over 2,100mm. This version is especially recommended when door closers are fitted on the door.

Doors up to 2,100mm height (3 hinges)

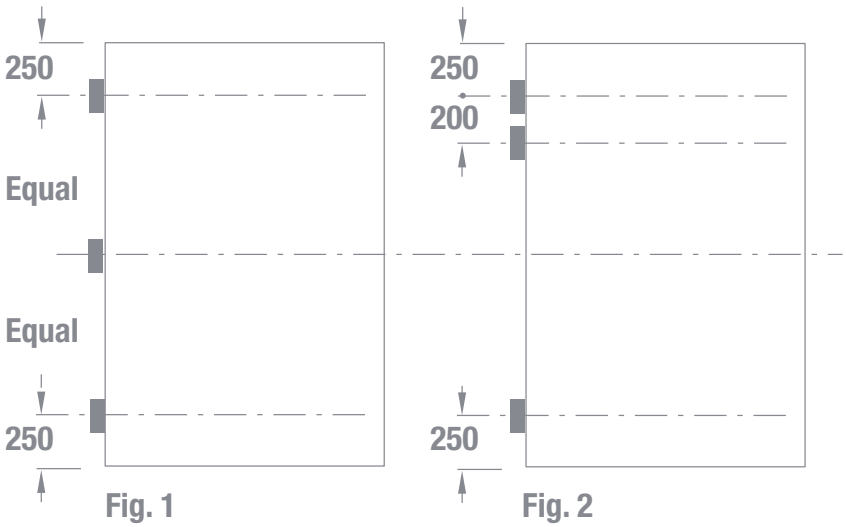

Doors over 2,100mm height (4 hinges)

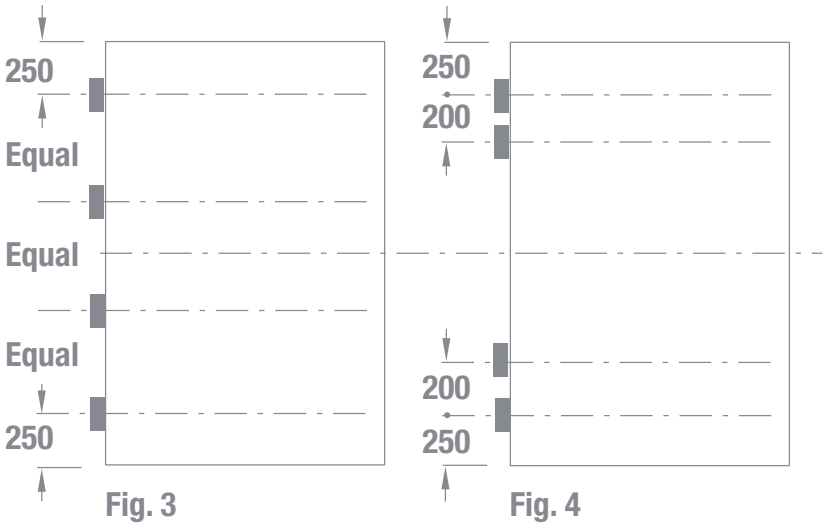

Adjusting the Door Weight

Normally, three hinges are fitted to each door. Their positions are determined by the weight of the door and its resistance to warping or whipping. Hinge specification is also determined by the adjusted door weight (based on the actual weight supplied by the manufacturer). The factors by which the door mass has to be adjusted for excessive widths of door are calculated by dividing the door height by its width. For a factor of 2 or greater, no allowance has to be made. When the factor is less than 2, the door mass has to be increased by the value required to bring the factor to 2 expressed as a percentage. These percentages are shown in the side loading calculations table shown on the right.

Door size		Factor	Normal increase of Door Height mass of door leaf %
Door height mm	Door width mm		
2,000mm	1,000	2.00	0
	1,050	1.90	10
	1,100	1.82	18
	1,150	1.74	26
	1,200	1.66	33
	1,250	1.60	40

Doors of excess width, please refer to side loading calculation table		
Actual door weight	Door closer + 20%	= Adjusted door weight
	Door closer (Backcheck) + 75%	
	Extra heavy use + 10%	
	Light use - 10%	

Additional tables to aid understanding of EN1935 2002
Digit 8 - hinge grade, regarding information on door mass and test cycles:

Table B shows the mass range of typical doors

Door type	Mass kg	Duty
Cupboard, wardrobe, cabinet, louvered doors and shutters	3.0–10.0	Light
Light internal large wardrobe and large louvered doors	10.0–17.5	Light
Medium internal doors	17.5–25.0	Medium
Heavy internal doors	25.0–37.5	Medium
Heavy internal doors	40.0–60.0	Heavy
Oversize or special external doors	55.0–110.0	Heavy

Table C gives estimated number of operations of typical doors and use. Failure to assess the likely frequency of operation of a door could lead to the specification of inadequate hinges and subsequent problems.

Door type	Cycles / day	Cycles / annum
High use/high duty situations:		
Large department store entrance	5,000	1,500,000
Large office building entrance	4,000	920,000
Cinema or theatre entrance	1,300	455,000
School entrance	1,250	225,000
Entrance door to school toilets	1,250	225,000
City centre shop entrance	1,000	300,000
Large city bank entrance	1,000	250,000
School corridor fire door	600	108,000
Town bank entrance	500	150,000
City centre restaurant entrance	500	150,000
Large office corridor fire door	450	104,000
Town centre shop entrance	400	120,000
Large office or factory toilet entrance	400	92,000
Hospital ward door	350	128,000

Door type	Cycles / day	Cycles / annum
Medium use/medium duty situations:		
School classroom door	80	15,000
Office door	75	18,000
Store toilet door	60	18,000
Dwelling front entrance	12	4,400
Dwelling rear or side door	15	5,400

Standards

This standard provides details on product types, classification by use, test cycles, door mass, corrosion resistance, as well as defl nitions, product performance requirements, test apparatus, test methods and marking of products. In addition, the published standard includes annexes with details for special applications.

Scope

This European standard specifies requirements for single-axis hinges for windows and **doors opening in one direction only,** whose **rotation axis is no more than 30mm from the face of the sash or door.** It covers both fixed pin and lift-off hinges, and contains additional requirements for hinges intended for use on fire doors.

Digit 1 - Category of use

Four categories of use are identified:

- grade 1: light duty
- grade 2: medium duty
- grade 3: heavy duty
- grade 4: severe duty

Door type	Mass kg	Duty
Cupboard, wardrobe, cabinet, louvered doors and shutters	3.0–10.0	Light
Light internal large wardrobe and large louvered doors	10.0–17.5	Light
Medium internal doors	17.5–25.0	Medium
Heavy internal doors	25.0–37.5	Medium
Heavy internal doors	40.0–60.0	Heavy
Oversize or special external doors	55.0–110.0	Heavy

Digit 2 - Durability

Three grades are identified for single-axis hinges manufactured to this European standard:

- grade 3: 10,000 test cycles, for light duty hinges on windows only
- grade 4: 25.000 test cycles, for light duty hinges on windows and doors
- grade 7: 200,000 test cycles, for medium, heavy and severe duty hinges on doors only

Digit 3 - Test Door Mass

Eight door mass grades related to single-axis hinges are identified in this European standard as shown in Table 1 below.

Test door mass grade	Door mass
0	10 kg
1	20 kg
2	40 kg
3	60 kg
4	80 kg
5	100 kg
6	120 kg
7	160 kg

Digit 4 — Suitability for firelsmoke door use

Four categories of use are identified:

- grade 0: not suitable forfirei'smoke resistant door assemblies
- grade 1: suitable for fire/smoke resistant door assemblies subject to satisfactory assessment of the contribution of the single-axis hinge to the fire resistance of the specified fire/smoke door assemblies.
- Such assessmentis beyond the scope of this European standard (see EN 1634-1).

Digit 5— Safety

- Single-axis hinges are required to satisfy the essential requirements of safety in use. Therefore, only grade 1 is identified

Digit 6 — Corrosion Resistance

Five grades of corrosion resistance are identified in accordance with EN 1870:

- grade 0: no defined corrosion resistance.
- grade 1: mild resistance.
- grade 2: moderate resistance.
- grade 3: high resistance.

Digit 7 — Security

Two grades of security are identified for single-axis hinges:

- grade 0: not suitable for use on burglar-resistant door assemblies
- grade 1 : suitable for applications requiring a degree of security. Annex C of this European standard details the hinge grade to use for the level of security required

Digit 8 — Hinge Grade

Fourteen grades are identified in this European standard and are detailed in Table 2 below. The full classification is shown in the standard

Hinge Grade	Usage	Test cycles	Door mass
1	Window	10 000	10 kg
2	Window	10 000	20 kg
3	Window/Door	25 000	20 kg
4	Door	200 000	20 kg
5	Window	10 000	40 kg
6	Window/Door	25 000	40 kg
7	Door	200 000	40 kg
8	Window	10 000	60 kg
9	Window/Door	25 000	60 kg
10	Door	200 000	80 kg
11	Door	200 000	80 kg
12	Door	200 000	100 kg
13	Door	200 000	120 kg
14	Door	200 000	160 kg

Certificate of Constancy of Performance for Hinges

Certificate of Constancy of Performance

0359-CPR-00355

Intertek

In compliance with Regulation 305/2011/EU of the European Parliament and of the Council of 9 March 2011 (the Construction Products Regulation), this certificate[T4] applies to the construction product(s).

Product(s): Single axis hinges
(refer to attached appendix for details and conditions)

Placed on the market under the trade mark of: ASSA ABLOY ITALIA S.p.A.
Via Salvatore Quasimodo, 136, 0014 Rome, 40017, ITALY

Produced in the manufacturing plant(s): A003

Intended use: On fire/smoke compartmentation doors fitted with door closing devices (to enable such doors to close reliably and thus achieve self closing in the event of fire)

This certificate attests that all provisions concerning the assessment and verification of constancy of performance described in Annex ZA of the standard(s):

EN 1935:2002/AC:2003

Under system 1 for the performance set out in this certificate are applied and that the performance of the construction product is assessed to remain constant.

This certificate was first issued on 17 February 2015 under CPR (305/2011) and updated on 26th November 2015 and will remain valid as long as neither the harmonised standard, the construction product, the AVCP methods nor the manufacturing conditions in the plant are modified significantly, unless suspended or withdrawn by the notified product certification body.

CE
0359

The issued document and statement(s) herein makes reference only to a presumption of conformity in accordance with the CPR Regulations EU 305/2011 (as amended). However, it is the manufacturer's or their authorised representative's sole responsibility to affix the CE logo and, by doing so, confirms full compliance and conformity to all other European mandatory directives and regulations that may also apply.

Intertek Testing & Certification Limited
Cleeve Road, Leatherhead
Surrey, KT22 7SB
Tel: +44 (0)1372 370900
Fax: +44 (0)1372 370877
E-mail: ppa.uk@intertek.com
www.intertek.com

David Bigland
Certification Manager

Date 26 NOV-2015
Issue 2

Registered No 3272261 Academy Place, 1-9 Brook Street, Brentwood, Essex, CM14 5NQ, United Kingdom

This Certificate is for the exclusive use of Intertek's client and is provided pursuant to the agreement between Intertek and its Client. Intertek's responsibility and liability are limited to the terms and conditions of the agreement. Intertek assumes no liability to any party, other than to the Client in accordance with the agreement, for any loss, expense or damage occasioned by the use of this certificate. Only the Client is authorized to permit copying or distribution of this Certificate and then only in its entirety. Any use of the Intertek name or one of its marks for the sale or advertisement of the tested material, product or service must first be approved in writing by Intertek.

Page 1 of 4

Certificate of Constancy of Performance for Hinges

Certificate of Constancy of Performance

0359-CPR-00355

Intertek

Appendix to Certificate of Constancy of Performance 0359-CPR-00355

Model Ref: Yale Branded Hinges, refer to Table A1.

Table A1. Product description for single axis hinges from ASSA ABLOY ITALIA S.p.A.:

Model No. for brand names			Sizes	Finish
Yale Italy	AAHK	Yale EMEA		
Y36100403303112	2BB403030-SSS	36-1000-0403-30-31-12	102x76x3mm	Satin
Y36100403303312	2BB403030-PSS	36-1000-0403-30-33-12	102x76x3mm	Polished
Y36100403306612	2BB403030-PVD	36-1000-0403-30-66-12	102x76x3mm	PVD
Y36100435303112	2BB403530-SSS	36-1000-0435-30-31-12	102x89x3mm	Satin
Y36100435303312	2BB403530-PSS	36-1000-0435-30-33-12	102x89x3mm	Polished
Y36100435306612	2BB403530-PVD	36-1000-0435-30-66-12	102x89x3mm	PVD
Y36100404303112	2BB404030-SSS	36-1000-0404-30-31-12	102x102x3mm	Satin
Y36100404303312	2BB404030-PSS	36-1000-0404-30-33-12	102x102x3mm	Polished
Y36100404306612	2BB404030-PVD	36-1000-0404-30-66-12	102x102x3mm	PVD
Y36104504303112	2BB454030-SSS	36-1000-4504-30-31-12	114x102x3mm	Satin
Y36104504303312	2BB454030-PSS	36-1000-4504-30-33-12	114x102x3mm	Polished
Y36104504306612	2BB454030-PVD	36-1000-4504-30-66-12	114x102x3mm	PVD
Y36104545303112	2BB454530-SSS	36-1000-4545-30-31-12	114x114x3mm	Satin
Y36104545303312	2BB454530-PSS	36-1000-4545-30-33-12	114x114x3mm	Polished
Y36104545306612	2BB454530-PVD	36-1000-4545-30-66-12	114x114x3mm	PVD
Y36104504353112	2BB454035-SSS	36-1000-4504-35-31-12	114x102x3.5mm	Satin
Y36104504353312	2BB454035-PSS	36-1000-4504-35-33-12	114x102x3.5mm	Polished
Y36104504356612	2BB454035-PVD	36-1000-4504-35-66-12	114x102x3.5mm	PVD
Y36104545353112	2BB454535-SSS	36-1000-4545-35-31-12	114x114x3.5mm	Satin
Y36104545353312	2BB454535-PSS	36-1000-4545-35-33-12	114x114x3.5mm	Polished
Y36104545356612	2BB454535-PVD	36-1000-4545-35-66-12	114x114x3.5mm	PVD
Hinge type: "2BB" represents 2 Ball bearing butt hinges				

Intertek Testing & Certification Limited, Cleeve Road, Leatherhead, Surrey, KT22 7SB
Tel: + 44 (0)1372 370000, Fax: +44 (0)1372 370277, E-mail: cpd.uk@intertek.com

0359-CPR-00355
Issue: 2

www.intertek.com

Registered No 3272261 Academy Place, 1-9 Brook Street, Brentwood, Essex, CM14 5NQ, United Kingdom

This Certificate is for the exclusive use of Intertek's client and is provided pursuant to the agreement between Intertek and its Client. Intertek's responsibility and liability are limited to the terms and conditions of the agreement. Intertek assumes no liability to any party, other than to the Client in accordance with the agreement, for any loss, expense or damage occasioned by the use of this Certificate. Only the Client is authorized to permit copying or distribution of this Certificate and then only in its entirety. Any use of the Intertek name or one of its marks for the sale or advertisement of the tested material, product or service must first be approved in writing by Intertek.

Certificate of Constancy of Performance for Hinges

Certificate of Constancy of Performance

0359-CPR-00355

Intertek

Table A2. Product classification for single axis hinges (EN 1935:2002/AC:2003) from ASSA ABLOY ITALIA S.p.A.[a,c]

Product Classification							
4	7	6	1[b]	1	4	0	13

Notes.

a. The single axis hinges shall be installed in accordance with the installation instructions for the product(s)

b. Digit 4 grade "1" was based on the test result from fire resistance test(s) (refer to Table A4).

c. This certificate of constancy of performance, refers to the requirements for the product(s) described under the CPR. There may be other European Directives, where requirements need to be declared before CE marking can be affixed by the manufacturer or their authorised representative

Supporting test reports for this certificate are as follows:

Table A3. Mechanical test reports & product classification for hinges from ASSA ABLOY ITALIA S.p.A..

Test Report	Model tested	Product Classification							
151106043GZU-001	102X76X3mm 114X114x3.5mm	4	7	6	_[a]	1	4	0	13
Model numbers assessed as having same performance: Models in Table A1above.									
Notes. a. Digit 4 becomes "1" after successful outcome of fire resistance test (refer to Table A4).									

Table A4. Fire test report(s) for hinges from ASSA ABLOY ITALIA S.p.A..

Test Report	Model tested	Test Method	Fire Resistance (minutes)	
			Integrity (E)	Insulation(I)
141209105GZU-1	114X114X3.5mm (satin finish)	EN 1634-1:2014	90	90
Model numbers assessed as having same performance: Models in Table A1 above.				

Intertek Testing & Certification Limited, Cleeve Road, Leatherhead, Surrey, KT22 7SB
Tel: +44 (0)1372 370900. Fax: +44 (0)1372 370977. E-mail: cpd.uk@intertek.com

0359-CPR-00355
Issue: 2

www.intertek.com

Registered No 3272291. Academy Place, 1-9 Brook Street, Brentwood, Essex, CM14 5NQ. United Kingdom

This Certificate is for the exclusive use of Intertek's client and is provided pursuant to the agreement between Intertek and its Client. Intertek's responsibility and liability are limited to the terms and conditions of the agreement. Intertek assumes no liability to any party, other than to the Client in accordance with the agreement, for any loss, expense or damage occasioned by the use of this Certificate, only the Client is authorised to permit copying or distribution of this Certificate and then only in its entirety. Any use of the Intertek name or one of its marks for the sale or advertisement of the tested material, product or service must first be approved in writing by Intertek.

Certificate of Constancy of Performance for Hinges

Certificate of Constancy of Performance

0359-CPR-00355

Intertek

Table A5. Single axis hinges (EN 1935:2002/AC:2003) according to the Annex ZA, Table ZA.1.

Product:	Single-axis hinges as defined in clause 1 of this standard.	
Intended uses:	On fire/smoke compartmentation doors fitted with door closing devices (to enable such doors to close reliably and thus achieve self closing in the event of fire)	
Requirement / characteristic	**Requirement clauses in this European Standard**	**Results**
Self closing	5.1 Initial friction torque	Less than 4,0 Nm with door mass 120 kg
	5.2 static Load - Load deformation	Pass with a displacement under load: - Lateral < 4 mm; - Vertical < 2 mm And a residual displacement after unloading: - Lateral < 0,2 mm; - Vertical < 0,3 mm
	5.2 static Load - Overload	Pass
	5.3 Shear strength	Pass No breakage and cracking Lateral deformation under loading < 3 mm Additional lateral and vertical displacement after unloading < 1 mm
	5.6 Hinges for use on fire-resistant and/or smoke-control doors	Grade 1: suitable for use on fire/smoke resistant door assemblies
Durability	5.4 Durability	Pass (200,000 cycles) Maximum wear: - Lateral < 0,2 mm - Vertical < 1 mm Maximum frictional torque: - After 20 cycles and completion of 200,000 cycles less than 4,0 Nm.
	5.5 Corrosion resistance	Grade 4, Neutral Salt Spray (NSS) – 240 hours
Dangerous substances	Note 1 of ZA 1	No dangerous substances declared for this product/intended use

Intertek Testing & Certification Limited, Cleeve Road, Leatherhead, Surrey, KT22 7SB
Tel: + 44 (0)1372 370900, Fax: 444 (0)1372 370877, E-mail: cpd.uk@intertek.com

0359-CPR-00355
Issue: 2

www.intertek.com

Registered No 3272291 Academy Place, 1-9 Brook Street, Brentwood, Essex, CM14 5NQ, United Kingdom

This Certificate is for the exclusive use of Intertek's client and is provided pursuant to the agreement between Intertek and its Client. Intertek's responsibility and liability are limited to the terms and conditions of the agreement. Intertek assumes no liability to any party, other than to the Client in accordance with the agreement, for any loss, expense or damage occasioned by the use of this Certificate. Only the Client is authorized to permit copying or distribution of this Certificate and then only in its entirety. Any use of the Intertek name or one of its marks for the sale or advertisement of the tested material, product or service must first be approved in writing by Intertek.

SS 304 Hinges

Stainless steel butt hinges

4 (1/4)	7 (3/4/7)	6 (1-8)	1[b] (0/1)	1 (1)	4 (0-4)	0 (0/1)	13 (1-14)

High quality stainless steel butt hinges.

Specifications:
- Butt hinge with ball bearings
- Stainless steel AISI 304
- Square corners
- Can be used on doors up to 120 kg

Features:
- CE marked
- Tested to EN1935:2002 class 13
- Suitable for fire and smoke resistant doors, tested to EN1634-1:2014
- Available in Stainless Steel Matt, Stainless Steel Polish and Polish Brass finishes

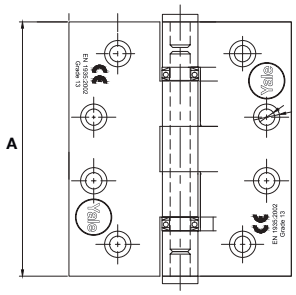

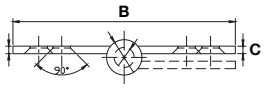

Hinge Size	Dimensions		
	A	B	C
4” x 3” x 3mm	102mm	76mm	3mm
4” x 3.5” x 3mm	102mm	89mm	3mm
4” x 4” x 3mm	102mm	102mm	3mm
4.5” x 4” x 3mm	114mm	102mm	3mm
4.5” x 4.5” x 3mm	114mm	114mm	3mm
4.5” x 4” x 3.5mm	114mm	102mm	3.5mm
4.5” x 4.5” x 3.5mm	114mm	114mm	3.5mm

SKU	DESCRIPTION	UOM	FIN	MAT	PKG
36-1000-0403-30-3112	Ball Bearing Butt Hinge, 4X3X3mm (101X76X3mm)	PR	SSM	SS 304	BOX
36-1000-0403-30-3312	Ball Bearing Butt Hinge, 4X3X3mm (101X76X3mm)	PR	SSP	SS 304	BOX
36-1000-0403-30-6612	Ball Bearing Butt Hinge, 4X3X3mm (101X76X3mm)	PR	PB	SS 304	BOX
36-1000-0435-30-3112	Ball Bearing Butt Hinge, 4X3.5X3mm (101X89X3mm)	PR	SSM	SS 304	BOX
36-1000-0435-30-3312	Ball Bearing Butt Hinge, 4X3.5X3mm (101X89X3mm)	PR	SSP	SS 304	BOX
36-1000-0435-30-6612	Ball Bearing Butt Hinge, 4X3.5X3mm (101X89X3mm)	PR	PB	SS 304	BOX
36-1000-0404-30-3112	Ball Bearing Butt Hinge, 4X4X3mm (101X101X3mm)	PR	SSM	SS 304	BOX
36-1000-0404-30-3312	Ball Bearing Butt Hinge, 4X4X3mm (101X101X3mm)	PR	SSP	SS 304	BOX
36-1000-0404-30-6612	Ball Bearing Butt Hinge, 4X4X3mm (101X101X3mm)	PR	PB	SS 304	BOX
36-1000-4504-30-3112	Ball Bearing Butt Hinge, 4.5X4X3mm (114X101X3mm)	PR	SSM	SS 304	BOX
36-1000-4504-30-3312	Ball Bearing Butt Hinge, 4.5X4X3mm (114X101X3mm)	PR	SSP	SS 304	BOX
36-1000-4504-30-6612	Ball Bearing Butt Hinge, 4.5X4X3mm (114X101X3mm)	PR	PB	SS 304	BOX
36-1000-4545-30-3112	Ball Bearing Butt Hinge, 4.5X4.5X3mm (114X114X3mm)	PR	SSM	SS 304	BOX
36-1000-4545-30-3312	Ball Bearing Butt Hinge, 4.5X4.5X3mm (114X114X3mm)	PR	SSP	SS 304	BOX
36-1000-4545-30-6612	Ball Bearing Butt Hinge, 4.5X4.5X3mm (114X114X3mm)	PR	PB	SS 304	BOX

SS 304 Hinges
Stainless steel butt hinges

SKU	DESCRIPTION	UOM	FIN	MAT	PKG
36-1000-4504-35-3112	Ball Bearing Butt Hinge, 4.5X4X3mm (114X101X3.5mm)	PR	SSM	SS 304	BOX
36-1000-4504-35-3312	Ball Bearing Butt Hinge, 4.5X4X3mm (114X101X3.5mm)	PR	SSP	SS 304	BOX
36-1000-4504-35-6612	Ball Bearing Butt Hinge, 4.5X4X3mm (114X101X3.5mm)	PR	PB	SS 304	BOX
36-1000-4545-35-3112	Ball Bearing Butt Hinge, 4.5X4.5X3.5mm (114X114X3.5mm)	PR	SSM	SS 304	BOX
36-1000-4545-35-3312	Ball Bearing Butt Hinge, 4.5X4.5X3.5mm (114X114X3.5mm)	PR	SSP	SS 304	BOX
36-1000-4545-35-6612	Ball Bearing Butt Hinge, 4.5X4.5X3.5mm (114X114X3.5mm)	PR	PVD G	SS 304	BOX

SS 201 Hinges
Stainless steel butt hinges

High quality stainless steel butt hinges.

Specifications:
- Butt hinge with ball bearings
- Stainless steel 201
- Square corners
- Can be used on doors up to 120 kg

Features:
- Available in satin, antique brass, polished gold finishes

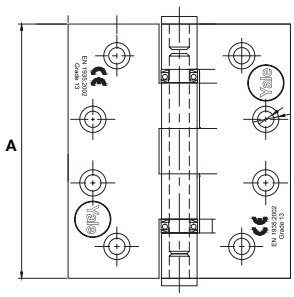

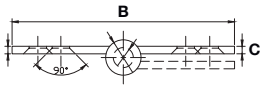

Hinge Size	Dimensions		
	A	B	C
4” x 3” x 3mm	102mm	76mm	3mm
4” x 3.5” x 3mm	102mm	89mm	3mm

SKU	DESCRIPTION	UOM	FIN	MAT	PKG
36-2000-0403-30-3112	102x76x3mm 2BB SS201 SSS	PR	SSM	SS 201	BOX
36-2000-0403-30-0912	102x76x3mm 2BB SS201 AB	PR	AB	SS 201	BOX
36-2000-0403-30-6612	102x76x3mm 2BB SS201 PVD	PR	PB	SS 201	BOX
36-2000-0435-30-3112	102x89x3mm 2BB SS201 SSS	PR	SSM	SS 201	BOX
36-2000-0435-30-0912	102x89x3mm 2BB SS201 AB	PR	AB	SS 201	BOX
36-2000-0435-30-6612	102x89x3mm 2BB SS201 PVD	PR	PVG G	SS 201	BOX

Disclaimer: SS201 Grade of hinges is recommended only to be used for internal doors and not in areas exposed to humidity

Door Closers

Door Closer

The door closers in this catalogue are divided into the following groups:
- Surface door closer with hold open & without hold open

Door closer functions in the door operating range

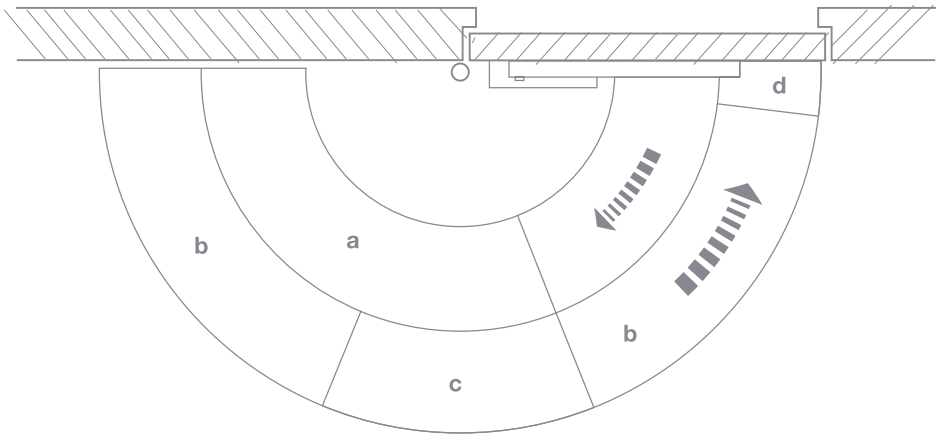

a Backcheck
With backcheck, the swing of a forcefully opened door (manually or for example by gusts of wind) is reduced. Damage to the door or wall are therefore minimised or eliminated.

b Closing speed
The exact setting of the closing speed guarantees a controlled closing of the door leaf.

c Closing delay
The closing delay increases the closing time so that, for example, persons carrying luggage or bulky items, mothers with prams, elderly persons, etc. have sufficient time to walk through the door.

d Latching action
The latching action controls the closing of the door and ensures, the lock closes reliably. Therefore the door closer increases the speed of the door . The hydraulic latching action is reducing the speed of the door to achieve a softer closing of the door.

Pinion Needle Bearings
High grade pinion with precision needle bearings increases efficiency and minimises wear ensuring a prolonged operational life.

Independently Adjustable Hydraulic Valves
Backcheck.
Latching speed.
Closing speed.

Spring
Highest grade silicon chrome steel springs provide smooth action and long life.

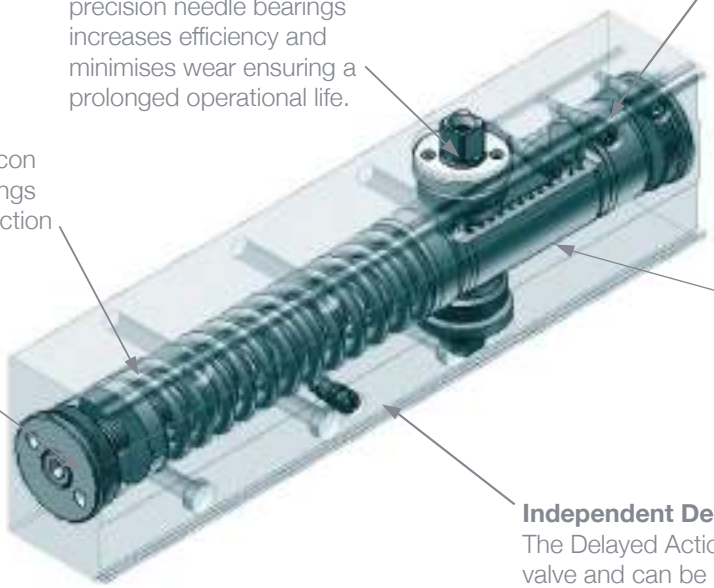

Rack & Pinion
High grade alloy steel rack and pinion delivers a smooth and reliable action for the life of the door closer.

Power Adjustment Screw
The spring strength of the unit can be adjusted to the requirements of a specific door simply by turning the adjustment screw with the hex key supplied.

Independent Delayed Action Valve
The Delayed Action is an independent valve and can be adjusted as part of the closing sequence or independently adjusted for delayed action.

Overload Protection
Pressure relief valves are fitted to all units to prevent closer damage in the event of excessive force.

Fixing types

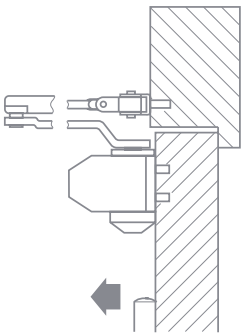

Standard installation
(Door leaf installation) on the pull side

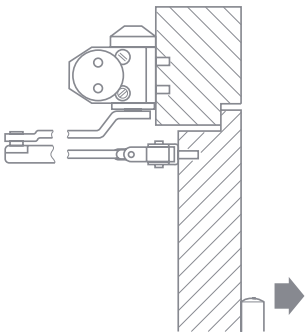

Overhead installation
(Transom fixing) on the push side

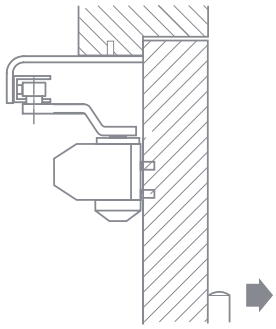

Parallel arm installation
On push side

Standards relevant to the architectural hardware industry

Standards

There are two standards currently in existence for door closing devices:
EN1154:1997 - Mechanical closers
EN1155:1997 - Electronically controlled closers
EN1154:1997 - Controlled door closing devices - requirements and test methods.

Scope

The standard covers all controlled surface mounted, concealed, or transom mounted closers as well as both single and double action floor springs.

These standards are shown in summary below in detail at the back of this catalogue. Attention should be paid to Digit 3, which deals with the power size and door width. Where applicable we have shown the relevant classification code using DHF graphic icons in this section.

Classification

Digit 1 - Category of use

For all internal and external doors for use by the public, and others, with little incentive to take care, i.e. where there is some chance of misuse of the door.

Grade 3: For closing doors from at least 105° open

Grade 4: For closing doors from 180° open

Note 1: Grade 4 classification assumes standard installation according to the manufacturer's instructions.

Note 2: For applications subject to extremes of abuse, or for particular limitations of opening angle, door closers incorporating backcheck function or provision of a separate door stop should be considered.

Digit 2 - Number of test cycles

Only one test duration is identified for the door closing device manufactured to this standard: Grade 8: 500,000 cycles

Digit 3 - Test door mass/size

Seven test door mass grades and related door closer power sizes are identified according to below table of this standard. Where a door closer provides a range of power sizes both the minimum and maximum sizes shall be identified.

TEST DOOR MASS AND RECOMMENDED DOOR WIDTHS		
Power size of closer	**Max. mass of leaf**	**Width of test door leaf**
1	20 kg	<750mm
2	40 kg	850mm
3	60 kg	950mm
4	80 kg	1,100mm
5	100 kg	1,250mm
6	120 kg	1,400mm
7	160 kg	1,600mm

Digit 4 - Fire behaviour

Grade 0: Not suitable for use on fire/smoke door assemblies

Grade 1: Suitable for use on fire/smoke door assemblies, subject to satisfactory assessment of the contribution of the emergency device to the fire resistance of specified fire/smoke door assemblies

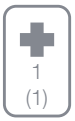

Digit 5 - Safety

All door closers are required to satisfy the Essential Requirement of safety in use contained in the Construction Products Directive by the EU. Therefore only **Grade 1** is identified.

Digit 6 - Corrosion resistance

Five grades are identified according to EN1670:

Grade 0: No defined corrosion resistance

Grade 1: Low resistance

Grade 2: Moderate resistance

Grade 3: High resistance

Grade 4: Very high resistance

Classification Code

:3:8:2/5:0:1:0

EXAMPLE:

The following marking denotes a closer capable of opening to at least 105°, and with a range of power sizes from size 2 to size 5. Note that as the 4th digit is zero, such a closer would not be suitable for fire door use.

Fire resisting doors

EN1154 makes the following recommendations as to the feature considered necessary for such devices when they are fitted to fire and smoke resisting doors.

a) The door closer when installed in accordance with the manufacturer's installation instruction shall be capable of closing the test door from any angle to which it may be opened.

b) Due to their low closing moments, door closers sizes 1 and 2 are not considered suitable for use on fire/smoke resisting door assemblies. Door closers with adjustable closing force shall be capable of adjustment to at least power size 3.

c) The door closer shall not include a hold open device unless it is electrically powered device in accordance with **EN1155**.

d) Control regulators shall be either concealed or operable only by means of a tool.

e) The design of a door closer shall be such that it is not possible to inhibit its closing action in any way without the use of a tool.

f) Any incorporated delayed action function shall be capable of adjustment to less than 25 seconds between the door closing angle of 120° and the end of the delay zone.

g) The door closer representative of its model shall have been incorporated in a door assembly that has satisfied the appropriate criteria of a fire test. The test shall have been on a full size assembly in accordance with **EN1634-1**.

EN1155: 1997 - Electrically powered hold open devices for swing doors - requirements and test methods

Scope

The standard specifies requirements for separate electrically powered hold-open devices and also for hold-open mechanisms incorporated in a door closer. Whilst these devices may incorporate smoke or fire detection elements, the performance of these particular elements is outside the scope of EN1155.

CE conformity

Where a door closing device has a CE certificate of conformity, this will be shown. Hence, it is stated in 8300 that all fire doors must have closing devices that are CE marked.

Fire resistance and smoke control

Tested for fire resistant and smoke control doors.

The use of a hold-open device on fire resistant and smoke control doors are not permitted or they are not tested for resistance and smoke control.

We give below a guide to the terminology used in connection with door closing devices.

Backcheck

A device built into the closer that checks the outward swing of the door. The backcheck damping is inversely proportional to the speed of the outward swing of the door. It should not be regarded as a door stop.

Closing speed

The speed with which the door is closed. Normally adjustable.

Closing force

The power that the closer exerts to close the door. Measured in the ENstandard from 1-6. See table below.

Latching action

The door movement becomes accelerated in the last few degrees of closing, in order to be able to overcome any resistance, such as seals, latch bolts, etc.

Delayed action

The closing speed of the door is reduced to minimal or the door stops, for a preset period, to allow passers-by sufficient time to pass through the door opening. i.e. Elderly persons, Hospital staff with beds, etc.

Hold open

This is a device to enable the closer to be held in the open position, usually at 90º, but some are variable in the opening degree. These closers must not be used on fire doors. (except where they are electronically controlled to close when the fire alarm is sounded).

Door stops

Always use a door stop, where practicable, whether a closer has a backcheck or not. This may take the form of a floor mounted version, wall/skirting mounted version or built-in as found with guide rail closers. The positioning of the stop is also important, and must be at least 66% (2/3rds) the door width away from the hinge, otherwise the stop acts as a fulcrum and could damage the door, the frame and the hinges. Where there is a maximum angle of opening stated the stop must be positioned at that point, otherwise damage to the closer will occur.

Note

Please ensure that the correct closing device is the appropriate one for the job it is intended to do and that it is the correct size. Too many closers are under specified, purely in an effort to reduce costs.

Size	Max. door width mm	Min. closing moments N.m
1	750	9
2	850	13
3	950	18
4	1100	26
5	1250	37
6	1400	54

It should be noted that size 3 is the minimum requirement for fire doors.

Certificate of Constancy of Performance for Door Closers
3000 series

warringtonfire
Proud to be part of element

Notified body No. 1121

Certificate of Constancy of Performance

1121-CPR-AD5449

In compliance with *Regulation 305/2011/EU of the European Parliament and of the Council of 9 March 2011* (the Construction Products Regulation or CPR), this certificate applies to the construction product

Yale 3000 Series Overhead Door Closer.

Intended use: For use on fire / smoke compartmentation single leaf and double leaf doors

STANDARD DOOR MOUNT PULL SIDE AND TRANSOM MOUNT PUSH SIDE APPLICATIONS.

Essential characteristics	Performance	Harmonised technical specification
	Mechanical Test Evidence: WIL 397055 Fire **Test Evidence**: WF No 166860 Iss 4	
Self closing 5.2.1 General		EN 1154:1996/A1:2002/AC:2006
5.2.2 Durability	500,000 test cycles	
5.2.3 Closing moment	Pass size 3	
5.2.4 Opening moment	Pass size 3	
5.2.5 Efficiency	>55% size 3	
5.2.6 Closing time	Pass	
5.2.7 Angles of operation	Grade 4, 180°	
5.2.8 Overload performance	Pass	
5.2.9 Temperature dependence	-15°C to +40°C	
5.2.10 Fluid leakage	Pass	
5.2.11 Damage	Pass	
5.2.12 Latch control	Pass	
5.2.13 Back check (optional)	NPD	
5.2.14 Delayed closing (optional)	NPD	
5.2.15 Adjustable closing force (optional)	NPD	
5.2.16 Zero position (double action door closers only)	NPD	
5.2.18 Fire/smoke door suitability	Pass	
Essential characteristics	Performance	Harmonised technical specification
Durability of Self Closing 5.2.2 Durability	500,000 test cycles	EN 1154:1996/A1:2002/AC:2006
5.2.17.1 corrosion	Grade 3 (96 hours)	
5.2.17.2 corrosion	Pass	
Dangerous Substances Annex ZA3	Pass: the materials in the door closer do not contain or release any dangerous substances in excess of the maximum levels specified in existing European material standards or any national regulations	

This certificate is the property of Warringtonfire Testing and Certification Limited. Registered in England and Wales
Registered Office: 10 Lower Grosvenor Place, London, United Kingdom, SW1W 0EN. Company Registration No: 11371436

Certificate of Constancy of Performance for Door Closers
3000 series

Certificate of Constancy of Performance

1121-CPR-AD5449

In compliance with *Regulation 305/2011/EU of the European Parliament and of the Council of 9 March 2011* (the Construction Products Regulation or CPR), this certificate applies to the construction product

Yale 3000 Series Overhead Door Closer.

Intended use: For use on fire / smoke compartmentation single leaf and double leaf doors

PARALLEL ARM APPLICATION.

Essential characteristics	Performance	Harmonised technical specification
Self closing 5.2.1 General		EN 1154:1996/A1:2002/AC:2006
5.2.2 Durability	500,000 test cycles	
5.2.3 Closing moment	Pass size 3	
5.2.4 Opening moment	Pass size 3	
5.2.5 Efficiency	>55% size 3	
5.2.6 Closing time	Pass	
5.2.7 Angles of operation	Grade 3, >105°	
5.2.8 Overload performance	Pass	
5.2.9 Temperature dependence	-15°C to +40°C	
5.2.10 Fluid leakage	Pass	
5.2.11 Damage	Pass	
5.2.12 Latch control	Pass	
5.2.13 Back check (optional)	NPD	
5.2.14 Delayed closing (optional)	NPD	
5.2.15 Adjustable closing force (optional)	NPD	
5.2.16 Zero position (double action door closers only)	NPD	
5.2.18 Fire/smoke door suitability	Pass	
Essential characteristics	Performance	Harmonised technical specification
Durability of Self Closing 5.2.2 Durability	500,000 test cycles	EN 1154:1996/A1:2002/AC:2006
5.2.17.1 corrosion	Grade 3 (96 hours)	
5.2.17.2 corrosion	Pass	
Dangerous Substances Annex ZA3	Pass: the materials in the door closer do not contain or release any dangerous substances in excess of the maximum levels specified in existing European material standards or any national regulations	

This certificate is the property of Warringtonfire Testing and Certification Limited. Registered in England and Wales
Registered Office: 10 Lower Grosvenor Place, London, United Kingdom, SW1W 0EN. Company Registration No: 11371436

Certificate of Constancy of Performance for Door Closers
3000 series

warringtonfire
Proud to be part of element

Certificate of constancy of performance

1121-CPR-AD5449

produced for

ASSA ABLOY Ltd
School Street, Willenhall, West Midlands, WV13 3PW

and produced in the manufacturing plant

K/002
This is coded format and the information is held by the Notified Body

This certificate attests that all provisions concerning the assessment and verification of constancy of performance and the performances described in Annex ZA of the standard(s)

EN 1154:1996/A1:2002/AC:2006

under system 1 *of AVCP* are applied and that

the product fulfils all the prescribed requirements set out above.

This certificate was first issued on **19/11/2019** and will remain valid to the date given below as long as the test methods and/or factory production control requirements included in the harmonised standard, used to assess the performance of the declared characteristics, do not change, and the product, and the manufacturing conditions in the plant are not modified significantly.

Valid to: **30/10/2022**

Paul Duggan
Certification Manager

CE

Warringtonfire Testing and Certification Limited
Holmesfield Road, Warrington, Cheshire, WA1 2DS, UK

Page **3** of **3**

This certificate is the property of Warringtonfire Testing and Certification Limited. Registered in England and Wales
Registered Office: 10 Lower Grosvenor Place, London, United Kingdom, SW1W 0EN. Company Registration No: 11371436

Certificate of Constancy of Performance for Door Closers

4000 series

warrington certification

Notified body No. 1121
Warrington Certification Limited, Holmesfield Road, Warrington, Cheshire, WA1 2DS, UK

Certificate of constancy of performance

1121-CPR-AD5100

In compliance with *Regulation 305/2011/EU of the European Parliament and of the Council of 9 March 2011* (the Construction Products Regulation or CPR), this certificate applies to the construction product

Yale 4000 Series Overhead door closer

Intended use: For use on fire rated single leaf and double leaf doors
STANDARD FIXING POSITION.

Essential characteristics	Performance	Harmonised technical specification
	Test Refs : 141204, 141204/P, 103201 & 142027.	
Self closing 5.2.1 General		EN 1154:1996/A1:2002/AC:2006
5.2.2 Durability	500,000 test cycles	
5.2.3 Closing moment	Pass size 2 to 4	
5.2.4 Opening moment	Pass size 3 to 4	
5.2.5 Efficiency	>50% size 2	
5.2.5 Efficiency	>60% size 4	
5.2.6 Closing time	Pass	
5.2.7 Angles of operation	Grade 3, >105°	
5.2.8 Overload performance	Pass	
5.2.9 Temperature dependence	-15°C to +40°C	
5.2.10 Fluid leakage	Pass	
5.2.11 Damage	Pass	
5.2.12 Latch control	Pass	
5.2.13 Back check (optional)	Pass	
5.2.14 Delayed closing (optional)	NPD	
5.2.15 Adjustable closing force (optional)	Pass	
5.2.16 Zero position (double action door closers only)	NPD	
5.2.18 Fire/smoke door suitability	Pass	
Essential characteristics	Performance	Harmonised technical specification
Durability of Self Closing 5.2.2 Durability	500,000 test cycles	EN 1154:1996/A1:2002/AC:2006
5.2.17.1 corrosion	Grade 4 (240 hours)	
5.2.17.2 corrosion	Pass	
Dangerous Substances Annex ZA3	Pass: the materials in the door closer do not contain or release any dangerous substances in excess of the maximum levels specified in existing European material standards or any national regulations	

Page 1 of 3

This certificate is the property of Warrington Certification Limited, part of Dovis (UK) Ltd.
Registered office: Holmesfield Road, Warrington, Cheshire, WA1 2DS, UK. Registered in England, No. 06 [illegible]

Certificate of Constancy of Performance for Door Closers

4000 series

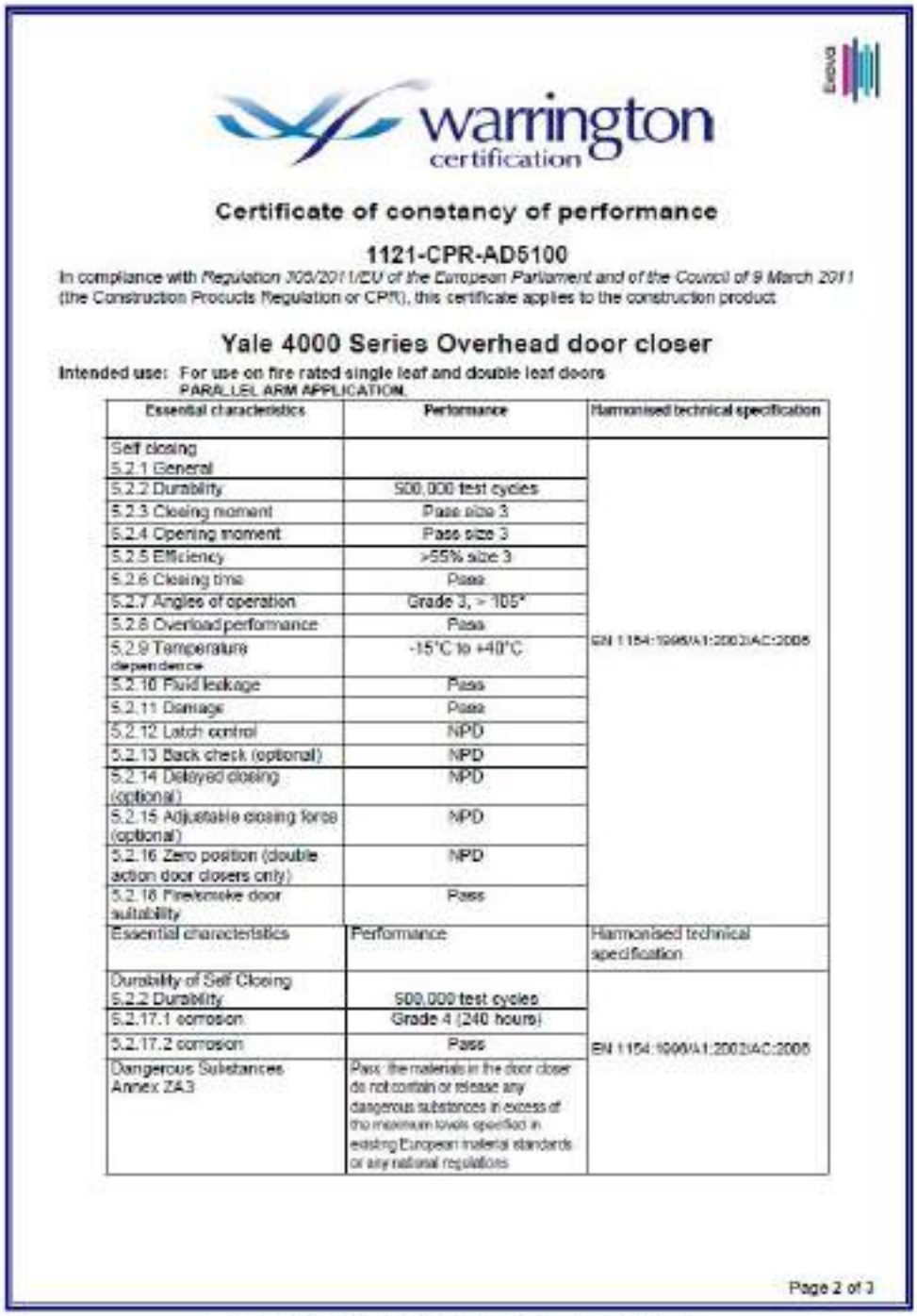

warrington certification

Certificate of constancy of performance

1121-CPR-AD5100

In compliance with *Regulation 305/2011/EU of the European Parliament and of the Council of 9 March 2011* (the Construction Products Regulation or CPR), this certificate applies to the construction product

Yale 4000 Series Overhead door closer

Intended use: For use on fire rated single leaf and double leaf doors
PARALLEL ARM APPLICATION.

Essential characteristics	Performance	Harmonised technical specification
Self closing 5.2.1 General		EN 1154:1996/A1:2002/AC:2006
5.2.2 Durability	500,000 test cycles	
5.2.3 Closing moment	Pass size 3	
5.2.4 Opening moment	Pass size 3	
5.2.5 Efficiency	>55% size 3	
5.2.6 Closing time	Pass	
5.2.7 Angles of operation	Grade 3, > 105°	
5.2.8 Overload performance	Pass	
5.2.9 Temperature dependence	-15°C to +40°C	
5.2.10 Fluid leakage	Pass	
5.2.11 Damage	Pass	
5.2.12 Latch control	NPD	
5.2.13 Back check (optional)	NPD	
5.2.14 Delayed closing (optional)	NPD	
5.2.15 Adjustable closing force (optional)	NPD	
5.2.16 Zero position (double action door closers only)	NPD	
5.2.18 Fire/smoke door suitability	Pass	
Essential characteristics	Performance	Harmonised technical specification
Durability of Self Closing 5.2.2 Durability	500,000 test cycles	EN 1154:1996/A1:2002/AC:2006
5.2.17.1 corrosion	Grade 4 (240 hours)	
5.2.17.2 corrosion	Pass	
Dangerous Substances Annex ZA3	Pass: the materials in the door closer do not contain or release any dangerous substances in excess of the maximum levels specified in existing European material standards or any national regulations	

Page 2 of 3

This certificate is the property of Warrington Certification Limited, part of Exova (UK) Ltd.
Registered office: Inchinnan Business Park, Renfrewshire, PA4 9RL, UK. Registered in Scotland, No. SC 179129

Certificate of Constancy of Performance for Door Closers
4000 series

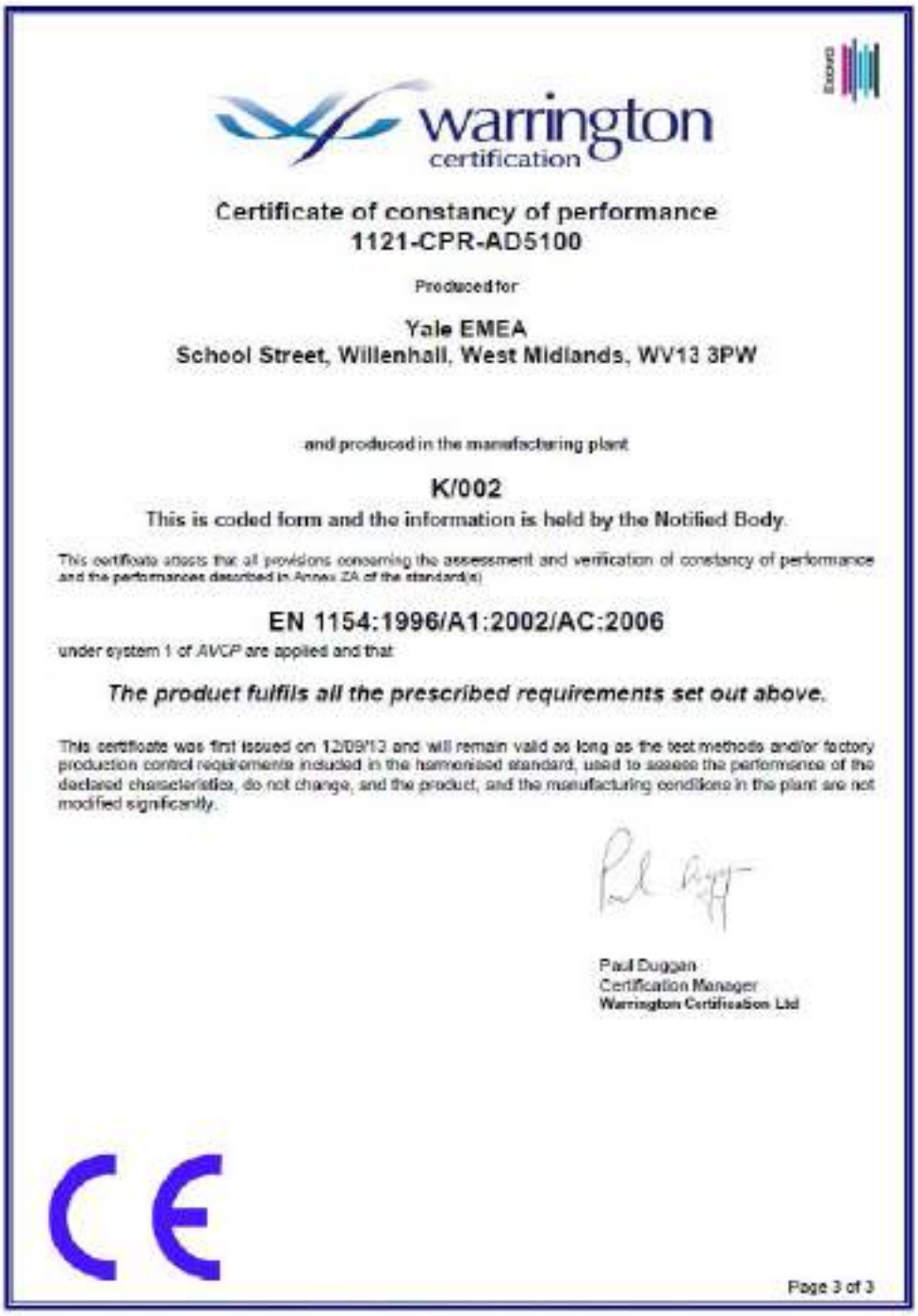

warrington
certification

Certificate of constancy of performance
1121-CPR-AD5100

Produced for

Yale EMEA
School Street, Willenhall, West Midlands, WV13 3PW

and produced in the manufacturing plant

K/002

This is coded form and the information is held by the Notified Body.

This certificate attests that all provisions concerning the assessment and verification of constancy of performance and the performances described in Annex ZA of the standard(s)

EN 1154:1996/A1:2002/AC:2006

under system 1 of *AVCP* are applied and that

The product fulfils all the prescribed requirements set out above.

This certificate was first issued on 12/09/13 and will remain valid as long as the test methods and/or factory production control requirements included in the harmonised standard, used to assess the performance of the declared characteristics, do not change, and the product, and the manufacturing conditions in the plant are not modified significantly.

Paul Duggan
Certification Manager
Warrington Certification Ltd

CE

Page 3 of 3

This certificate is the property of Warrington Certification Limited, part of Exova (UK) Ltd.
Registered office: Lockerbie Industrial Estate, Lockerbie, Hoddesdon, [illegible], UK. Registered in Scotland, No. [illegible]

Certificate of Constancy of Performance for Door Closers

5000 series

warrington certification

Notified body No. 1121
Warrington Certification Limited, Holmesfield Road, Warrington, Cheshire, WA1 2DS, UK

Certificate of constancy of performance

1121-CPR-AD5101

In compliance with *Regulation 305/2011/EU of the European Parliament and of the Council of 9 March 2011* (the Construction Products Regulation or CPR), this certificate applies to the construction product

Yale 5000 Series Overhead door closer

Intended use: For use on fire rated single leaf and double leaf doors
STANDARD AND TRANSOM MOUNT PULL SIDE FIXING POSITIONS

Essential characteristics	Performance	Harmonised technical specification
	Test Ref's : 403.2PCT, 140019/D, MPA12001003.10-01, 140785 & 144508.	
Self closing 5.2.1 General		EN 1154:1996/A1:2002/AC:2006
5.2.2 Durability	500,000 test cycles	
5.2.3 Closing moment	Pass size 2 to 4	
5.2.4 Opening moment	Pass size 2 to 4	
5.2.5 Efficiency	>50% size 2	
5.2.5 Efficiency	>60% size 4	
5.2.6 Closing time	Pass	
5.2.7 Angles of operation	Grade 4, 180°	
5.2.8 Overload performance	Pass	
5.2.9 Temperature dependence	-15°C to +40°C	
5.2.10 Fluid leakage	Pass	
5.2.11 Damage	Pass	
5.2.12 Latch control	Pass	
5.2.13 Back check (optional)	Pass	
5.2.14 Delayed closing (optional)	NPD	
5.2.15 Adjustable closing force (optional)	Pass	
5.2.16 Zero position (double action door closers only)	NPD	
5.2.18 Fire/smoke door suitability	Pass	
Essential characteristics	**Performance**	**Harmonised technical specification**
Durability of Self Closing 5.2.2 Durability	500,000 test cycles	EN 1154:1996/A1:2002/AC:2006
5.2.17.1 corrosion	Grade 4 (240 hours)	
5.2.17.2 corrosion	Pass	
Dangerous Substances Annex ZA3	Pass: the materials in the door closer do not contain or release any dangerous substances in excess of the maximum levels specified in existing European material standards or any national regulations	

Page 1 of 3

This certificate is the property of Warrington Certification Limited, part of Exova (UK) Ltd.
Registered Office: Lichfield Industrial Estate, Beancroft, Middlesex, WD3 4AH, UK. Registered in England, No. 1C 78839

Certificate of Constancy of Performance for Door Closers
5000 series

warrington certification

Certificate of constancy of performance

1121-CPR-AD5101

In compliance with *Regulation 305/2011/EU of the European Parliament and of the Council of 9 March 2011* (the Construction Products Regulation or CPR), this certificate applies to the construction product

Yale 5000 Series Overhead door closer

Intended use: For use on fire rated single leaf and double leaf doors
PARALLEL ARM APPLICATION.

Essential characteristics	Performance	Harmonised technical specification
Self closing 5.2.1 General		EN 1154:1996/A1:2002/AC:2006
5.2.2 Durability	500,000 test cycles	
5.2.3 Closing moment	Pass size 3	
5.2.4 Opening moment	Pass size 3	
5.2.5 Efficiency	>55% size 3	
5.2.6 Closing time	Pass	
5.2.7 Angles of operation	Grade 3, > 105°	
5.2.8 Overload performance	Pass	
5.2.9 Temperature dependence	-15°C to +40°C	
5.2.10 Fluid leakage	Pass	
5.2.11 Damage	Pass	
5.2.12 Latch control	NPD	
5.2.13 Back check (optional)	NPD	
5.2.14 Delayed closing (optional)	NPD	
5.2.15 Adjustable closing force (optional)	NPD	
5.2.16 Zero position (double action door closers only)	NPD	
5.2.18 Fire/smoke door suitability	Pass	
Essential characteristics	Performance	Harmonised technical specification
Durability of Self Closing 5.2.2 Durability	500,000 test cycles	EN 1154:1996/A1:2002/AC:2006
5.2.17.1 corrosion	Grade 4 (240 hours)	
5.2.17.2 corrosion	Pass	
Dangerous Substances Annex ZA3	Pass: the materials in the door closer do not contain or release any dangerous substances in excess of the maximum levels specified in existing European material standards or any national regulations	

Page 2 of 3

This certificate is the property of Warrington Certification Limited, part of Exova (UK) Ltd.
Registered office: Lochend Industrial Estate, Newbridge, Midlothian, EH28 8PL, UK. Registered in Scotland, No. SC 76429

Certificate of Constancy of Performance for Door Closers

5000 series

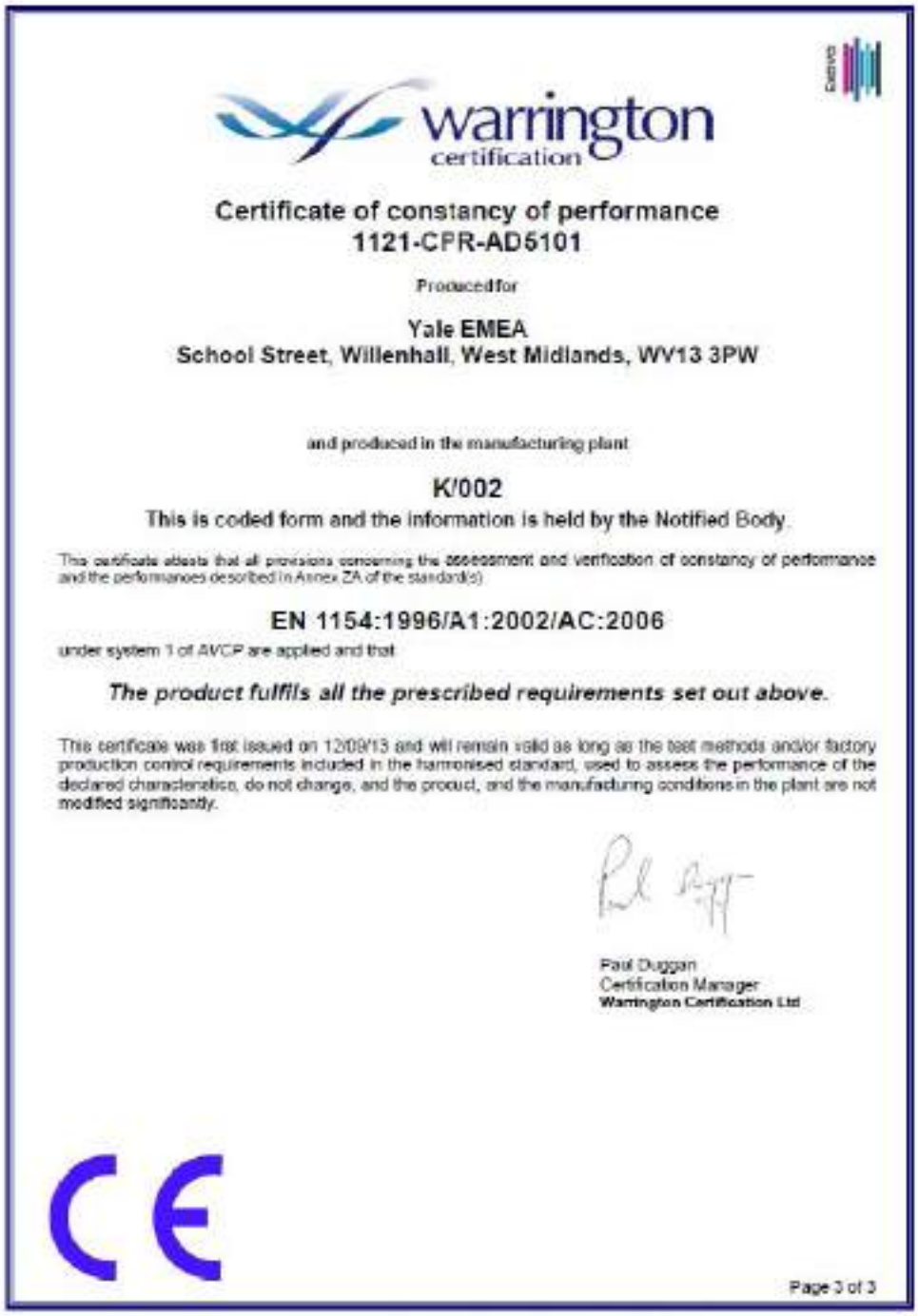

warrington certification

Certificate of constancy of performance
1121-CPR-AD5101

Produced for

Yale EMEA
School Street, Willenhall, West Midlands, WV13 3PW

and produced in the manufacturing plant

K/002

This is coded form and the information is held by the Notified Body.

This certificate attests that all provisions concerning the assessment and verification of constancy of performance and the performances described in Annex ZA of the standard(s)

EN 1154:1996/A1:2002/AC:2006

under system 1 of AVCP are applied and that

The product fulfils all the prescribed requirements set out above.

This certificate was first issued on 12/09/13 and will remain valid as long as the test methods and/or factory production control requirements included in the harmonised standard, used to assess the performance of the declared characteristics, do not change, and the product, and the manufacturing conditions in the plant are not modified significantly.

Paul Duggan
Certification Manager
Warrington Certification Ltd

CE

Page 3 of 3

This certificate is the property of Warrington Certification Limited, part of Exova (UK) Ltd.
Registered office: Lochard Industrial Estate, Newbridge, Midlothian, EH28 8PL, UK. Registered in Scotland, No. SC 179121

Certificate of Constancy of Performance for Door Closers

7000 series

warrington certification

Notified body No. 1121
Warrington Certification Limited, Holmesfield Road, Warrington, Cheshire, WA1 2DS, UK

Certificate of constancy of performance

1121-CPR-AD5102

In compliance with *Regulation 305/2011/EU of the European Parliament and of the Council of 9 March 2011* (the Construction Products Regulation or CPR), this certificate applies to the construction product

Yale 7000 Series Overhead door closer

Intended use: For use on fire rated single leaf and double leaf doors
STANDARD FIXING POSITION

Essential characteristics	Performance	Harmonised technical specification
	Test Refs : WIL 322417, WIL 322417/P & 153131 Issue 5.	
Self closing 5.2.1 General		EN 1154:1996/A1:2002/AC:2006
5.2.2 Durability	500,000 test cycles	
5.2.3 Closing moment	Pass size 2 to 6	
5.2.4 Opening moment	Pass size 2 to 6	
5.2.5 Efficiency	>50% size 2	
5.2.5 Efficiency	>65% size 6	
5.2.6 Closing time	Pass	
5.2.7 Angles of operation	Grade 4, 180°	
5.2.8 Overload performance	Pass	
5.2.9 Temperature dependence	-15°C to +40°C	
5.2.10 Fluid leakage	Pass	
5.2.11 Damage	Pass	
5.2.12 Latch control	Pass	
5.2.13 Back check (optional)	Pass	
5.2.14 Delayed closing (optional)	Pass	
5.2.15 Adjustable closing force (optional)	Pass	
5.2.16 Zero position (double action door closers only)	NPD	
5.2.18 Fire/smoke door suitability	Pass	
Essential characteristics	Performance	Harmonised technical specification
Durability of Self Closing 5.2.2 Durability	500,000 test cycles	EN 1154:1996/A1:2002/AC:2006
5.2.17.1 corrosion	Grade 3 (96 hours)	
5.2.17.2 corrosion	Pass	
Dangerous Substances Annex ZA3	Pass: the materials in the door closer do not contain or release any dangerous substances in excess of the maximum levels specified in existing European material standards or any national regulations	

Page 1 of 3

This certificate is the property of Warrington Certification Limited, part of Exova (UK) Ltd.
Registered office: Lyoneer Knutsford Road, Warrington, Cheshire, WA3 6PL, UK. Registered in Scotland, No. SC 76459

Certificate of Constancy of Performance for Door Closers

7000 series

warrington certification

Certificate of constancy of performance

1121-CPR-AD5102

In compliance with *Regulation 305/2011/EU of the European Parliament and of the Council of 9 March 2011* (the Construction Products Regulation or CPR), this certificate applies to the construction product

Yale 7000 Series Overhead door closer

Intended use: For use on fire rated single leaf and double leaf doors
PARALLEL ARM APPLICATION.

Essential characteristics	Performance	Harmonised technical specification
Self closing 5.2.1 General		EN 1154:1996/A1:2002/AC:2006
5.2.2 Durability	500,000 test cycles	
5.2.3 Closing moment	Pass size 3 to 5	
5.2.4 Opening moment	Pass size 3 to 5	
5.2.5 Efficiency	>65% size 3	
5.2.5 Efficiency	>65% size 5	
5.2.6 Closing time	Pass	
5.2.7 Angles of operation	Grade 4, 180°	
5.2.8 Overload performance	Pass	
5.2.9 Temperature dependence	-15°C to +40°C	
5.2.10 Fluid leakage	Pass	
5.2.11 Damage	Pass	
5.2.12 Latch control	Pass	
5.2.13 Back check (optional)	Pass	
5.2.14 Delayed closing (optional)	NPD	
5.2.15 Adjustable closing force (optional)	Pass	
5.2.16 Zero position (double action door closers only)	NPD	
5.2.18 Fire/smoke door suitability	Pass	
Essential characteristics	Performance	Harmonised technical specification
Durability of Self Closing 5.2.2 Durability	500,000 test cycles	EN 1154:1996/A1:2002/AC:2006
5.2.17.1 corrosion	Grade 3 (96 hours)	
5.2.17.2 corrosion	Pass	
Dangerous Substances Annex ZA3	Pass: the materials in the door closer do not contain or release any dangerous substances in excess of the maximum levels specified in existing European material standards or any national regulations	

Page 2 of 3

This certificate is the property of Warrington Certification Limited, part of Exova (UK) Ltd.
Registered Office: Lubford House, Buckingham Road, Daventry, Northants, NN11 4FJ, UK. Registered in England, No. 4124293

Certificate of Constancy of Performance for Door Closers
7000 series

warrington
certification

Certificate of constancy of performance
1121-CPR-AD5102

Produced for

Yale EMEA
School Street, Willenhall, West Midlands, WV13 3PW

and produced in the manufacturing plant

K/002

This is coded form and the information is held by the Notified Body

This certificate attests that all provisions concerning the assessment and verification of constancy of performance and the performances described in Annex ZA of the standard(s)

EN 1154:1996/A1:2002/AC:2006

under system 1 of *AVCP* are applied and that

The product fulfils all the prescribed requirements set out above.

This certificate was first issued on 12/09/13 and will remain valid as long as the test methods and/or factory production control requirements included in the harmonised standard, used to assess the performance of the declared characteristics, do not change, and the product, and the manufacturing conditions in the plant are not modified significantly.

Paul Duggan
Certification Manager
Warrington Certification Ltd

CE

Page 3 of 3

This certificate is the property of Warrington Certification Limited, part of Exova (UK) Ltd.
Registered Office: Lockhead Industrial Estate, Newbridge, Midlothian, EH28 8PL, UK. Registered in Scotland, No. SC 79420

Features		300 Series	722 Series	3000 series	4000 Series	5000 Series	7000 Series
Material - Body	Di-Casting body	•	•	•			
	Anodized aluminum for body				•	•	•
Material - Arm	Steel Stamping Arm	•	•	•	•	•	
	Steel Forged Arm						•
Door Weight(kg)	40 kg				•	•	•
	45 kg	•	•		•	•	•
	57 kg	•	•				
	60 kg			•	•	•	•
	68 kg	•	•				
	80 kg	•	•		•	•	•
	120 kg						•
Door Width(mm)	850 mm				•	•	•
	870mm	•	•				
	950 mm	•	•	•	•	•	•
	1100 mm	•	•		•	•	•
	1250 mm						•
	1400 mm						•
Max. degree of opening	145	•					
	160	•	•				
	180		•	•	•	•	•
Mechanism	Rack & Pinion	•	•	•	•	•	•
Adjustable Closing & latching Speed	Yes	•	•	•	•	•	•
Arm Type	Standard Arm	•	•	•	•	•	•
	Hold Open Arm	•		•	•	•	•
Colors	Silver	•	•	•	•	•	•
	Black	•	•	•	•	•	•
	White	•	•	•	•	•	•
	Brown	•	•	•	•	•	•
	Gold	•	•	•	•	•	•
Fire Rating	90 mins (Timber Door)	•	•				
	120 mins (Timber Door)			•	•	•	•
	240 mins (Steel Door)						•
Power size	Fixed power size 3			•			
	Selectable position power size 2/3/4	•	•		•	•	
	Adjustable power size 2 ~6						•
Durability	100,000 Cycles	•	•				
	500,000 Cycles			•	•	•	•
Salt spray test	Grade 3(96 hours)			•			•
	Grade 4(240 hours)				•	•	
Temperature dependence	-15°C to 40°C			•	•	•	•
Certificate	UL	•	•				
	CE			•	•	•	•

Overhead door closer
300 series

Light duty power selectable door closer.

Specifications:
- Casted aluminum body
- UL listed
- Non handed installation

Features:
- Rack and pinion mechanism
- Selectable class 2, 3 & 4
- Adjustable closing and latching speed
- Max door width: 1100mm
- Max door weight: 80 kg
- Can be installed with standard or hold open arm and PA bracket
- Hold open type should not be installed on fire doors
- Available in silver, white, brown, black & gold

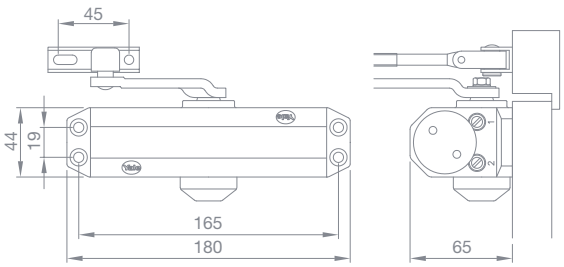

2	850mm	40 kg
3	950mm	60 kg
4	1100mm	80 kg

SKU	DESCRIPTION	UOM	FIN	MAT	PKG	WGT
30-0300-0001-00-5011	300 Series overhead door closer, Std arm, UL listed	PC	White	ALU, ALY	BOX	1.74
30-0300-0004-00-5011	300 Series overhead door closer, HO arm, UL listed	PC	White	ALU, ALY	BOX	1.85
30-0300-0001-00-5511	300 Series overhead door closer, Std arm, UL listed	PC	BLACK	ALU, ALY	BOX	1.74
30-0300-0004-00-5511	300 Series overhead door closer, HO arm, UL listed	PC	BLACK	ALU, ALY	BOX	1.85
30-0300-0001-00-6011	300 Series overhead door closer, Std arm, UL listed	PC	SILVER	ALU, ALY	BOX	1.74
30-0300-0004-00-6011	300 Series overhead door closer, HO arm, UL listed	PC	SILVER	ALU, ALY	BOX	1.85
30-0300-0001-00-6511	300 Series overhead door closer, Std arm, UL listed	PC	GOLD	ALU, ALY	BOX	1.74
30-0300-0004-00-6511	300 Series overhead door closer, HO arm, UL listed	PC	GOLD	ALU, ALY	BOX	1.85
30-0300-0001-00-7511	300 Series overhead door closer, Std arm, UL listed	PC	BROWN	ALU, ALY	BOX	1.74
30-0300-0004-00-7511	300 Series overhead door closer, HO arm, UL listed	PC	BROWN	ALU, ALY	BOX	1.85

Overhead door closer
3000 series

Medium duty CE marked fixed power size door closer.

Available the demand in the Middle East.

Specifications:
- Casted aluminum body
- CE marked
- Non handed installation

Features:
- Rack and pinion mechanism
- Fixed Power Size 3
- Max door width: 950mm
- Max door weight: 60 kg
- Adjustable closing and latching speed
- Can be installed with standard or hold open arm and PA bracket
- Hold open type should not be installed on fire doors
- Available in silver, white, brown, black & gold

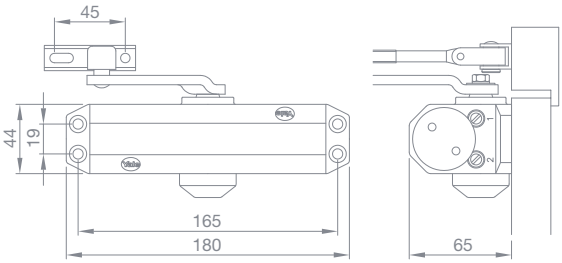

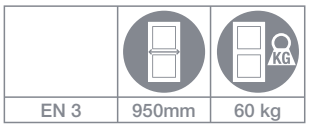

SKU	DESCRIPTION	UOM	FIN	MAT	PKG	WGT
30-3000-0001-00-5011	3000 Series overhead door closer, Std arm, CE	PC	WHITE	ALU, ALY	BOX	1.74
30-3000-0004-00-5011	3000 Series overhead door closer, HO arm, CE	PC	WHITE	ALU, ALY	BOX	1.85
30-3000-0001-00-5511	3000 Series overhead door closer, Std arm, CE	PC	BLACK	ALU, ALY	BOX	1.74
30-3000-0004-00-5511	3000 Series overhead door closer, HO arm, CE	PC	BLACK	ALU, ALY	BOX	1.85
30-3000-0001-00-6011	3000 Series overhead door closer, Std arm, CE	PC	SILVER	ALU, ALY	BOX	1.74
30-3000-0004-00-6011	3000 Series overhead door closer, HO arm, CE	PC	SILVER	ALU, ALY	BOX	1.85
30-3000-0001-00-6511	3000 Series overhead door closer, Std arm, CE	PC	GOLD	ALU, ALY	BOX	1.74
30-3000-0004-00-6511	3000 Series overhead door closer, HO arm, CE	PC	GOLD	ALU, ALY	BOX	1.85
30-3000-0001-00-7511	3000 Series overhead door closer, Std arm, CE	PC	BROWN	ALU, ALY	BOX	1.74
30-3000-0004-00-7511	3000 Series overhead door closer, HO arm, CE	PC	BROWN	ALU, ALY	BOX	1.85

Overhead door closer
4000 series

Medium duty CE marked power selectable door closer

Specifications:
- Casted aluminum body
- CE marked
- Non handed installation

Features:
- Rack and pinion mechanism
- Selectable size 2, 3 & 4
- Max door width: 1100mm
- Max door weight: 80 kg
- Adjustable closing and latching speed
- Can be installed with standard or hold open arm and PA bracket
- Hold open type should not be installed on fire doors
- Available in silver, white, brown, black & gold

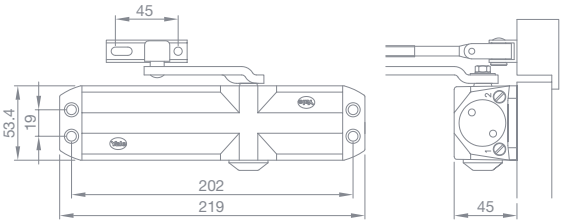

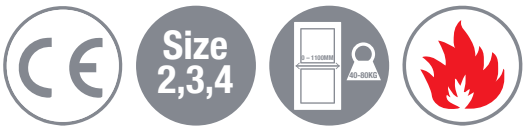

EN 2	850mm	40 kg
EN 3	950mm	60 kg
EN 4	1100mm	80 kg

SKU	DESCRIPTION	UOM	FIN	MAT	PKG	WGT
30-4000-0001-00-5011	4000 Series overhead door closer, Std arm, CE	PC	WHITE	ALU, ALY	BOX	1.62
30-4000-0004-00-5011	4000 Series overhead door closer, HO arm, CE	PC	WHITE	ALU, ALY	BOX	1.70
30-4000-0001-00-5011	4000 Series overhead door closer, Std arm, CE	PC	BLACK	ALU, ALY	BOX	1.62
30-4000-0004-00-5011	4000 Series overhead door closer, HO arm, CE	PC	BLACK	ALU, ALY	BOX	1.70
30-4000-0001-00-6011	4000 Series overhead door closer, Std arm, CE	PC	SILVER	ALU, ALY	BOX	1.62
30-4000-0004-00-6011	4000 Series overhead door closer, HO arm, CE	PC	SILVER	ALU, ALY	BOX	1.70
30-4000-0001-00-6511	4000 Series overhead door closer, Std arm, CE	PC	GOLD	ALU, ALY	BOX	1.62
30-4000-0004-00-6511	4000 Series overhead door closer, HO arm, CE	PC	GOLD	ALU, ALY	BOX	1.70
30-4000-0001-00-7511	4000 Series overhead door closer, Std arm, CE	PC	BROWN	ALU, ALY	BOX	1.62
30-4000-0004-00-7511	4000 Series overhead door closer, HO arm, CE	PC	BROWN	ALU, ALY	BOX	1.70

Overhead door closer
5000 series

Medium duty CE marked power selectable door closer.
Available on demand in the Middle East.

Specifications:
- Casted aluminum body
- CE marked
- Non handed installation

Features:
- Rack and pinion mechanism
- Selectable size 2, 3 & 4
- Max door width: 1100mm
- Max door weight 80 kg
- Adjustable closing and latching speed
- A built-in pressure relief valve protects the closer against abuse
- Can be installed with standard or hold open arm and PA bracket
- Hold open type should not be installed on fire doors
- Available in silver, white, brown, black & gold

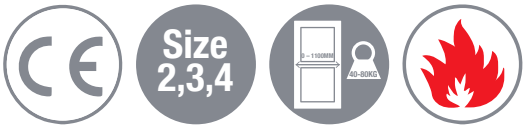

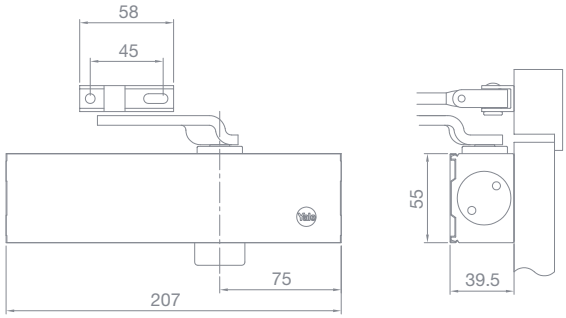

EN 2	850mm	40 kg
EN 3	950mm	60 kg
EN 4	1100mm	80 kg

SKU	DESCRIPTION	UOM	FIN	MAT	PKG	WGT
30-5000-0001-00-5011	5000 Series overhead door closer, Std arm, CE	PC	WHITE	ALU, ALY	BOX	2.10
30-5000-0004-00-5011	5000 Series overhead door closer, HO arm, CE	PC	WHITE	ALU, ALY	BOX	2.32
30-5000-0001-00-5511	5000 Series overhead door closer, Std arm, CE	PC	BLACK	ALU, ALY	BOX	2.10
30-5000-0004-00-5511	5000 Series overhead door closer, HO arm, CE	PC	BLACK	ALU, ALY	BOX	2.32
30-5000-0001-00-6011	5000 Series overhead door closer, Std arm, CE	PC	SILVER	ALU, ALY	BOX	2.10
30-5000-0004-00-6011	5000 Series overhead door closer, HO arm, CE	PC	SILVER	ALU, ALY	BOX	2.32
30-5000-0001-00-6511	5000 Series overhead door closer, Std arm, CE	PC	GOLD	ALU, ALY	BOX	2.10
30-5000-0004-00-6511	5000 Series overhead door closer, HO arm, CE	PC	GOLD	ALU, ALY	BOX	2.32
30-5000-0001-00-7511	5000 Series overhead door closer, Std arm, CE	PC	BROWN	ALU, ALY	BOX	2.10
30-5000-0004-00-7511	5000 Series overhead door closer, HO arm, CE	PC	BROWN	ALU, ALY	BOX	2.32

Overhead door closer
7000 series

CE marked heavy duty power adjustable door closer

Specifications:
- Casted aluminum body
- CE marked
- Non handed installation

Features:
- Rack and pinion mechanism
- Adjustable power size class 2 to 6
- Max door width: 1400mm
- Max door weight: 120 kg
- Adjustable closing and latching speed
- Adjustable back check
- A built-in pressure relief valve protects the closer against abuse
- Can be installed with standard or hold open arm and PA bracket
- Hold open type should not be installed on fire doors
- Available in silver, white, brown, black & gold

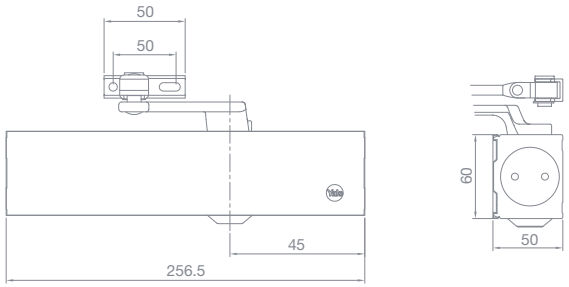

EN 2	850mm	40 kg
EN 3	950mm	60 kg
EN 4	1100mm	80 kg
EN 5	1250mm	100 kg
EN 6	1400mm	120 kg

SKU	DESCRIPTION	UOM	FIN	MAT	PKG	WGT
30-7000-0001-00-5011	7000 Series overhead door closer, Std arm, CE	PC	WHITE	ALU, ALY	BOX	3.36
30-7000-0004-00-5011	7000 Series overhead door closer, HO arm, CE	PC	WHITE	ALU, ALY	BOX	3.44
30-7000-0001-00-5511	7000 Series overhead door closer, Std arm, CE	PC	BLACK	ALU, ALY	BOX	3.36
30-7000-0004-00-5511	7000 Series overhead door closer, HO arm, CE	PC	BLACK	ALU, ALY	BOX	3.44
30-7000-0001-00-6011	7000 Series overhead door closer, Std arm, CE	PC	SILVER	ALU, ALY	BOX	3.36
30-7000-0004-00-6011	7000 Series overhead door closer, HO arm, CE	PC	SILVER	ALU, ALY	BOX	3.44
30-7000-0001-00-6511	7000 Series overhead door closer, Std arm, CE	PC	GOLD	ALU, ALY	BOX	3.36
30-7000-0004-00-6511	7000 Series overhead door closer, HO arm, CE	PC	GOLD	ALU, ALY	BOX	3.44
30-7000-0001-00-7511	7000 Series overhead door closer, Std arm, CE	PC	BROWN	ALU, ALY	BOX	3.36
30-7000-0004-00-7511	7000 Series overhead door closer, HO arm, CE	PC	BROWN	ALU, ALY	BOX	3.44

Overhead door closer
722 series

Specifications:
- Selectable force UL 2-4 adjustable closing speed

Features:
- Rack and pinion mechanism
- Body in cast aluminum and steel arm design for easy instalation small ledge on doors with wall adjacent 90 °
- Closing speed and latching action
- Adjustable via lateral regulating values
- Equipped with link arm
- Max door weight: 80 kg

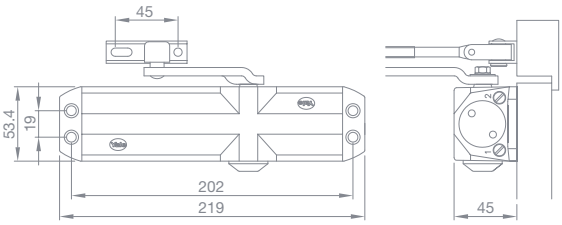

2	850mm	40 kg
3	950mm	60 kg
4	1100mm	80 kg

SKU	DESCRIPTION	UOM	FIN	MAT	PKG	WGT
7221220052	722 Series overhead door closer, Std arm, CE	PC	BLACK	ALU, ALY	BOX	1.70
7221220053	722 Series overhead door closer, Std arm, CE	PC	WHITE	ALU, ALY	BOX	1.70
7221220056	722 Series overhead door closer, Std arm, CE	PC	BROWN	ALU, ALY	BOX	1.70
7221220057	722 Series overhead door closer, Std arm, CE	PC	SILVER	ALU, ALY	BOX	1.70
7221220058	722 Series overhead door closer, Std arm, CE	PC	GOLD	ALU, ALY	BOX	1.70

Yale®

Lever Handles

Decorative stainless steel handles

Elisa

Specifications:
- Stainless steel AISI 304
- Rosette Ø54x8mm
- Sprung lever
- Spindle 8x8mm
- Matching escutcheons for euro cylinder

Features:
- Conforms to EN1906:2012 - Grade 4
- Tested to 200,000 cycles
- Finish options satin, polished and PVD satin gold

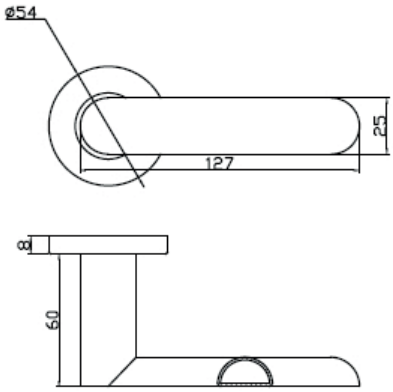

SKU	DESCRIPTION	UOM	FIN	MAT	PKG	WGT
35-SS04-T029-CE-31-11	Decorative lever handle, Elisa design, SS304, SSS, Box	PR	SSS	SS304	BOX	1100
35-SS04-T029-CE-32-11	Decorative lever handle, Elisa design, SS304, PSS, Box	PR	PSS	SS304	BOX	1100
35-SS04-T029-CE-66-11	Decorative lever handle, Elisa design, SS304, PVD GLD, Box	PR	PVD GLD	SS304	BOX	1100

Decorative stainless steel handles

Giulia

Specifications:
- Stainless steel AISI 304
- Rosette Ø54x8mm
- Sprung lever
- Spindle 8x8mm
- Matching escutcheons for euro cylinder

Features:
- Conforms to EN1906:2012 - Grade 4
- Tested to 200,000 cycles
- Finish options satin, polished and PVD satin gold

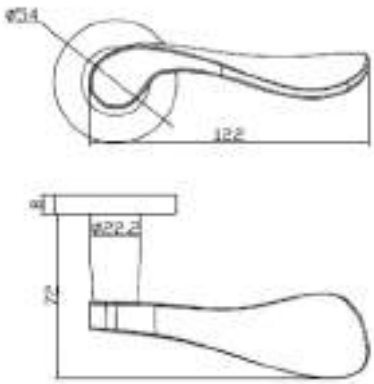

SKU	DESCRIPTION	UOM	FIN	MAT	PKG	WGT
35-SS04-T001-CE-31-11	Decorative lever handle, Gulia design, SS304, SSS, Box	PR	SSS	SS304	BOX	1100
35-SS04-T001-CE-32-11	Decorative lever handle, Gulia design, SS304, PSS, Box	PR	PSS	SS304	BOX	1100
35-SS04-T001-CE-66-11	Decorative lever handle, Gulia design, SS304, PVD GLD, Box	PR	PVD GLD	SS304	BOX	1100
35-SS04-T001-CE-09-11	Decorative lever handle, Gulia design, SS304, AB, Box	PR	AB	SS304	BOX	1100

Decorative stainless steel handles

Sara

Specifications:
- Stainless steel AISI 304
- Rosette Ø54x8mm
- Sprung lever
- Spindle 8x8mm
- Matching escutcheons for euro cylinder

Features:
- Conforms to EN1906:2012 - Grade 4
- Tested to 200,000 cycles
- Finish options satin, polished and PVD satin gold

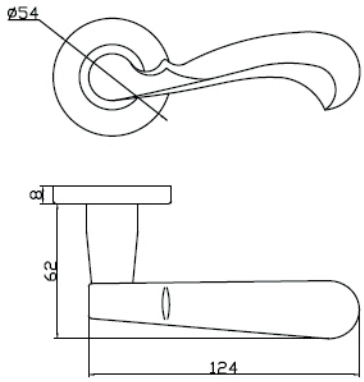

SKU	DESCRIPTION	UOM	FIN	MAT	PKG	WGT
35-SS04-T006-CE-31-11	Decorative lever handle, Sara design, SS304, SSS, Box	PR	SSS	SS304	BOX	1100
35-SS04-T006-CE-32-11	Decorative lever handle, Sara design, SS304, PSS, Box	PR	PSS	SS304	BOX	1100
35-SS04-T006-CE-66-11	Decorative lever handle, Sara design, SS304, PVD GLD, Box	PR	PVD GLD	SS304	BOX	1100
35-SS04-T006-CE-09-11	Decorative lever handle, Sara design, SS304, AB, Box	PR	AB	SS304	BOX	1100

Decorative stainless steel handles

Mia

Specifications:
- Stainless steel AISI 304
- Rosette Ø54x8mm
- Sprung lever
- Spindle 8x8mm
- Matching escutcheons for euro cylinder

Features:
- Conforms to EN1906:2012 - Grade 4
- Tested to 200,000 cycles
- Finish options satin, polished and PVD satin gold

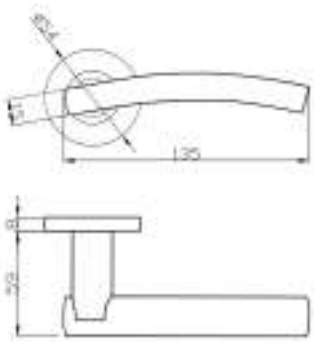

SKU	DESCRIPTION	UOM	FIN	MAT	PKG	WGT
35-SS04-T065-CE-31-11	Decorative lever handle, Mia design, SS304, SSS, Box	PR	SSS	SS304	BOX	1100
35-SS04-T065-CE-32-11	Decorative lever handle, Mia design, SS304, PSS, Box	PR	PSS	SS304	BOX	1100
35-SS04-T065-CE-66-11	Decorative lever handle, Mia design, SS304, PVD GLD, Box	PR	PVD GLD	SS304	BOX	1100

Decorative stainless steel handles

Laura

Specifications:
- Stainless steel AISI 304
- Square rosette 53x8.5mm
- Sprung lever
- Spindle 8x8mm
- Matching escutcheons for euro cylinder

Features:
- Conforms to EN1906:2012 - Grade 4
- Tested to 200,000 cycles
- Finish options satin, polished and PVD satin gold

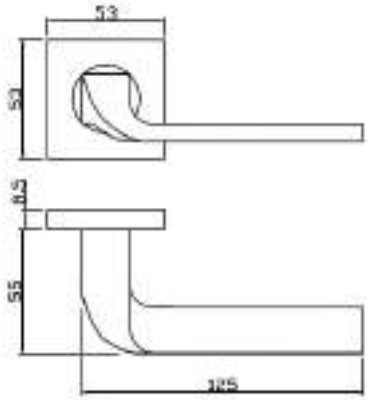

SKU	DESCRIPTION	UOM	FIN	MAT	PKG	WGT
35-SS04-S098-CE-31-11	Decorative lever handle, Laura design, SS304, SSS, Box	PR	SSS	SS304	BOX	1100
35-SS04-S098-CE-32-11	Decorative lever handle, Laura design, SS304, PSS, Box	PR	PSS	SS304	BOX	1100
35-SS04-S098-CE-66-11	Decorative lever handle, Laura design, SS304, PVD GLD, Box	PR	PVD GLD	SS304	BOX	1100

Decorative stainless steel handles
Martina

Specifications:
- Stainless steel AISI 304
- Square rosette 53x8.5mm
- Sprung lever
- Spindle 8x8mm
- Matching escutcheons for euro cylinder

Features:
- Conforms to EN1906:2012 - Grade 4
- Tested to 200,000 cycles
- Finish options satin, polished and PVD satin gold

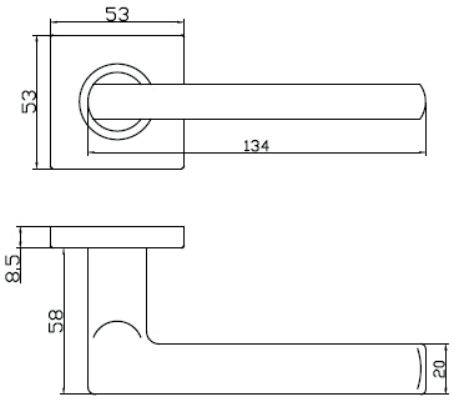

SKU	DESCRIPTION	UOM	FIN	MAT	PKG	WGT
35-SS04-T038-CE-31-11	Decorative lever handle, Martina design, SS304, SSS, Box	PR	SSS	SS304	BOX	1100
35-SS04-T038-CE-32-11	Decorative lever handle, Martina design, SS304, PSS, Box	PR	PSS	SS304	BOX	1100
35-SS04-T038-CE-66-11	Decorative lever handle, Martina design, SS304, PVD GLD, Box	PR	PVD GLD	SS304	BOX	1100

Decorative stainless steel handles

Anna

Specifications:
- Stainless steel AISI 304
- Square rosette 53x8.5mm
- Sprung lever
- Spindle 8x8mm
- Matching escutcheons for euro cylinder

Features:
- Conforms to EN1906:2012 - Grade 4
- Tested to 200,000 cycles
- Finish options satin, polished and PVD satin gold

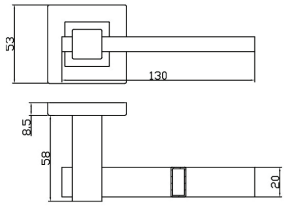

SKU	DESCRIPTION	UOM	FIN	MAT	PKG	WGT
35-SS04-T042-CE-31-11	Decorative lever handle, Anna design, SS304, SSS, Box	PR	SSS	SS304	BOX	1100
35-SS04-T042-CE-32-11	Decorative lever handle, Anna design, SS304, PSS, Box	PR	PSS	SS304	BOX	1100
35-SS04-T042-CE-66-11	Decorative lever handle, Anna design, SS304, PVD GLD, Box	PR	PVD GLD	SS304	BOX	1100

Stainless steel handles

U-design lever on rosette

Specifications:

- Tubular stainless steel AISI 304
- Rosette Ø54x8mm
- Sprung lever Ø19mm
- Spindle 8x8mm
- Tested to Grade 4 EN1906:2012
- Matching escutcheons for euro cylinder

Features:

- Suitable for wooden 60 minute fire rated door
- Suitable for harsh weather conditions
- Satin stainless steel finish standard, polished stainless steel finish available on demand

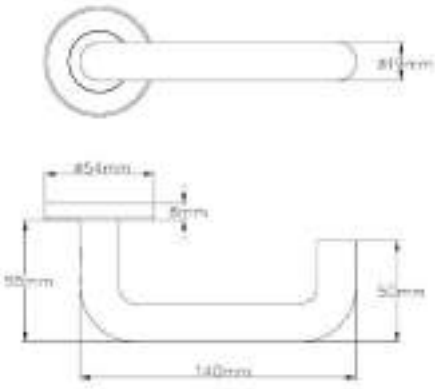

SKU	DESCRIPTION	UOM	FIN	MAT	PKG	WGT
35-SS04-T101-CE-31-11	U-design handle and escutcheon set	PR	SS MATT	SS 304	BOX	

Stainless steel handles
L-design lever on rosette

Specifications:
- Tubular stainless steel AISI 304
- Rosette Ø54x8mm
- Sprung lever Ø19mm
- Spindle 8x8mm
- Tested to Grade 4 EN1906:2012
- Matching escutcheons for euro cylinder

Features:
- Suitable for wooden 60 minute fire rated door
- Suitable for harsh weather conditions

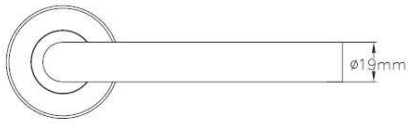

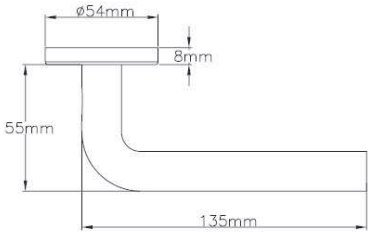

SKU	DESCRIPTION	UOM	FIN	MAT	PKG	WGT
35-SS04-T102-CE-31-11	L-design handle and escutcheon set	PR	SS MATT	SS 304	BOX	

Stainless steel handles
U-design lever on square plate

Specifications:
- Stainless steel AISI 304
- Tubular sprung lever option of Ø19mm or Ø22mm
- Plate 170x170x2mm
- Suitable for use with 72mm or 85mm centre euro cylinder lock case
- Spindle 8x8mm

Features:
- Through fixings included suitable for wood or metal doors
- Satin stainless steel finish

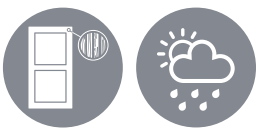

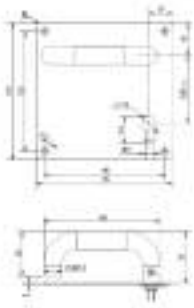

SKU	DESCRIPTION	UOM	FIN	MAT	PKG	WGT
35-SS04-0119-72-31-11	Ø19mm lever on 170x170mm square plate, 72mm centres	PR	SS MATT	SS 304	BOX	
35-SS04-0122-72-31-11	Ø22mm lever on 170x170mm square plate, 72mm centres	PR	SS MATT	SS 304	BOX	
35-SS04-0119-85-31-11	Ø19mm lever on 170x170mm square plate, 85mm centres	PR	SS MATT	SS 304	BOX	
35-SS04-0122-85-31-11	Ø22mm lever on 170x170mm square plate, 85mm centres	PR	SS MATT	SS 304	BOX	

Lever handles with rosette
Milano

Specifications:
- Aluminium lever with spring mechanism
- Zinc alloy rosette and escutcheon Ø54x9mm
- Electroplated finishes
- Spindle (8x8mm) and fixings included
- Spindle with secure grub screw fixing

Features:
- Suitable for locks with 8mm square hub
- Rosette with threaded base and cover
- Satin nickel and antique brass finishes
- Suitable for doors 35 - 50mm thick
- Recommended for internal doors

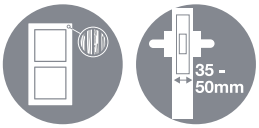

SKU	DESCRIPTION	UOM	FIN	MAT	PKG	WGT
35-ZR-A016-CE-22-11	Essential series, rose lever handle, Milano design, Alu, Zinc Alloy, SN, Box	PR	SN	Alu, Zinc Alloy	BOX	650
35-ZR-A016-CE-09-11	Essential series, rose lever handle, Milano design, Alu, Zinc Alloy, AB, Box	PR	AB	Alu, Zinc Alloy	BOX	650

Lever handles with rosette
Apollo

Specifications:
- Aluminium lever with spring mechanism
- Zinc alloy rosette and escutcheon Ø54x9mm
- Electroplated finishes
- Spindle (8x8mm) and fixings included
- Spindle with secure grub screw fixing

Features:
- Suitable for locks with 8mm square hub
- Rosette with threaded base and cover
- Satin nickel and antique brass finishes
- Suitable for doors 35 - 50mm thick
- Recommended for internal doors

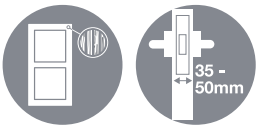

SKU	DESCRIPTION	UOM	FIN	MAT	PKG	WGT
35-ZR-A027-CE-22-11	Essential series, rose lever handle, Apollo design, Alu, Zinc Alloy, SN, Box	PR	SN	Alu, Zinc Alloy	BOX	650
35-ZR-A027-CE-09-11	Essential series, rose lever handle, Apollo design, Alu, Zinc Alloy, AB, Box	PR	AB	Alu, Zinc Alloy	BOX	650

Lever handles with rosette
Venezia

Specifications:
- Aluminium lever with spring mechanism
- Zinc alloy rosette and escutcheon Ø54x9mm
- Electroplated finishes
- Spindle (8x8mm) and fixings included
- Spindle with secure grub screw fixing

Features:
- Suitable for locks with 8mm square hub
- Rosette with threaded base and cover
- Satin nickel and antique brass finishes
- Suitable for doors 35 - 50mm thick
- Recommended for internal doors

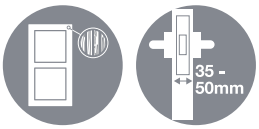

SKU	DESCRIPTION	UOM	FIN	MAT	PKG	WGT
35-ZR-A055-CE-22-11	Essential series, rose lever handle, Venezia design, Alu, Zinc Alloy, SN, Box	PR	SN	Alu, Zinc Alloy	BOX	650
35-ZR-A055-CE-09-11	Essential series, rose lever handle, Venezia design, Alu, Zinc Alloy, AB, Box	PR	AB	Alu, Zinc Alloy	BOX	650

Lever handles with rosette
Napoli

Specifications:
- Aluminium lever with spring mechanism
- Zinc alloy rosette and escutcheon Ø54x9mm
- Electroplated finishes
- Spindle (8x8mm) and fixings included
- Spindle with secure grub screw fixing

Features:
- Suitable for locks with 8mm square hub
- Rosette with threaded base and cover
- Satin nickel and antique brass finishes
- Suitable for doors 35 - 50mm thick
- Recommended for internal doors

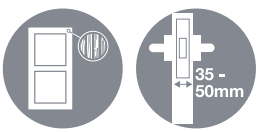

SKU	DESCRIPTION	UOM	FIN	MAT	PKG	WGT
35-ZR-A075-CE-22-11	Essential series, rose lever handle, Napoli design, Alu, Zinc Alloy, SN, Box	PR	SN	Alu, Zinc Alloy	BOX	650
35-ZR-A075-CE-09-11	Essential series, rose lever handle, Napoli design, Alu, Zinc Alloy, AB, Box	PR	AB	Alu, Zinc Alloy	BOX	650

Lever handles with rosette
Cortina

Specifications:
- Aluminium lever with spring mechanism
- Zinc alloy rosette and escutcheon Ø54x9mm
- Electroplated finishes
- Spindle (8x8mm) and fixings included
- Spindle with secure grub screw fixing

Features:
- Suitable for locks with 8mm square hub
- Rosette with threaded base and cover
- Satin nickel and antique brass finishes
- Suitable for doors 35 - 50mm thick
- Recommended for internal doors

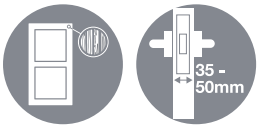

SKU	DESCRIPTION	UOM	FIN	MAT	PKG	WGT
35-ZR-A007-CE-22-11	Essential series, rose lever handle, Cortina design, Alu, Zinc Alloy, SN, Box	PR	SN	Alu, Zinc Alloy	BOX	650
35-ZR-A007-CE-09-11	Essential series, rose lever handle, Cortina design, Alu, Zinc Alloy, AB, Box	PR	AB	Alu, Zinc Alloy	BOX	650

Lever handles with rosette
Bathroom Set

Specifications:
- Inside turn knob and outside emergency release
- Zinc alloy material Ø54mm
- Threaded base and cover
- Spindles and adaptor to suit lock with 4mm, 6mm or 8mm hub

Features:
- Electroplated satin nickel or antique brass finish

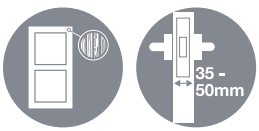

SKU	DESCRIPTION	UOM	FIN	MAT	PKG	WGT
35-ZX-03-WC-22-50	Snib release indicator lock - for high pressure laminate doors, Alu, Zinc Alloy, SN, Box	PR	SN	Alu, Zinc Alloy	BOX	250
35-ZX-03-WC-09-50	Snib release indicator lock - for high pressure laminate doors, Alu, Zinc Alloy, AB, Box	PR	AB	Alu, Zinc Alloy	BOX	250

Handles for aluminium and PVC doors

Lever handles on narrow plate

Specifications:
- Cast aluminium material
- 85mm or 92mm centre distance
- Reversible spring mechanism
- Steel spindle 140x8x8mm suitable for doors upto 90mm thick

Features:
- Reversible lever
- Fixing from inside only
- 2 or 3 fixing variants
- Painted finish
- Matching fixing screws

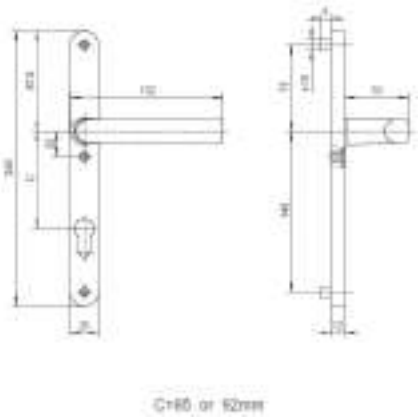

SKU	DESCRIPTION	UOM	FIN	MAT	PKG	WGT
35-A023-85-2P-5001	Handles for aluminium and PVC doors Lever handles on narrow plate, 85mm centres, White, Box	PR	WHITE	ALU	BOX	180
35-A023-85-2P-5601	Handles for aluminium and PVC doors Lever handles on narrow plate, 85mm centres, Black, Box	PR	BLACK	ALU	BOX	180
35-A023-85-2P-7501	Handles for aluminium and PVC doors Lever handles on narrow plate, 85mm centres, Brown, Box	PR	BROWN	ALU	BOX	180
35-A023-92-2P-5001	Handles for aluminium and PVC doors Lever handles on narrow plate, 92mm centres, White, Box	PR	WHITE	ALU	BOX	180
35-A023-92-2P-5601	Handles for aluminium and PVC doors Lever handles on narrow plate, 92mm centres, Black, Box	PR	BLACK	ALU	BOX	180
35-A023-92-2P-7501	Handles for aluminium and PVC doors Lever handles on narrow plate, 92mm centres, Brown, Box	PR	BROWN	ALU	BOX	180
35-A023-85-3P-5001	Handles for aluminium and PVC doors Lever handles on narrow plate, 85mm centres, White, Box	PR	WHITE	ALU	BOX	180
35-A023-85-3P-5601	Handles for aluminium and PVC doors Lever handles on narrow plate, 85mm centres, Black, Box	PR	BLACK	ALU	BOX	180
35-A023-85-3P-7501	Handles for aluminium and PVC doors Lever handles on narrow plate, 85mm centres, Brown, Box	PR	BROWN	ALU	BOX	180
35-A023-92-3P-5001	Handles for aluminium and PVC doors Lever handles on narrow plate, 92mm centres, White, Box	PR	WHITE	ALU	BOX	180
35-A023-92-3P-5601	Handles for aluminium and PVC doors Lever handles on narrow plate, 92mm centres, Black, Box	PR	BLACK	ALU	BOX	180
35-A023-92-3P-7501	Handles for aluminium and PVC doors Lever handles on narrow plate, 92mm centres, Brown, Box	PR	BROWN	ALU	BOX	180

Pull Handles

Stainless steel pull handles
Single H pull handle - Back fixing

Specifications:
- AISI grade 304
- T-shape, back fixing
- Length 600mm, fixing centre size 450mm, Ø32mm

Features:
- Satin stainless steel finish
- Special sizes on request for a minimum order quantity

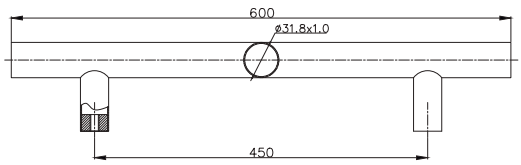

SKU	DESCRIPTION	UOM	FIN	MAT	PKG	WGT
35-9004-8245-32-31-50	H-Type pull handle, one side fixing, SS 304, /C450xØ32mm, SSM, Box	PC	SS MATT	SS 304	BOX	780

Stainless steel pull handles
Single D pull handle - Back fixing

Specifications:
- AISI grade 304
- D-shape, back fixing
- Fixing centre size 300mm or 450mm, Ø19 and 22mm

Features:
- Satin stainless steel finish
- Special sizes on request for a minimum order quantity

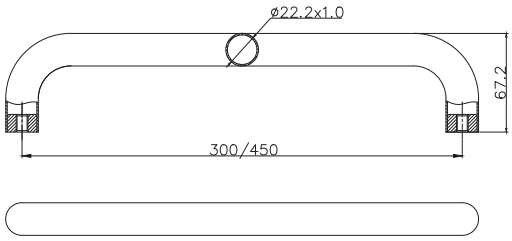

SKU	DESCRIPTION	UOM	FIN	MAT	PKG	WGT
35-9004-8030-19-31-50	D-Type pull handle, one side fixing, SS 304, O/A300xØ19mm, SSM, Box	PC	SS MATT	SS 304	BOX	560
35-9004-8130-22-31-50	D-Type pull handle, one side fixing, SS 304, 300xØ22mm, SSM, Box	PC	SS MATT	SS 304	BOX	560
35-9004-8145-22-31-50	D-Type pull handle, one side fixing, SS 304, 450xØ22mm, SSM, Box	PC	SS MATT	SS 304	BOX	560

Stainless steel pull handles
Single D pull handle - Concealed fixing

Specifications:
- AISI grade 304
- D-shape with rosettes, concealed fixing
- Fixing centre size 300mm, Ø19 or 22mm

Features:
- Satin stainless steel finish
- Special sizes on request for a minimum order quantity

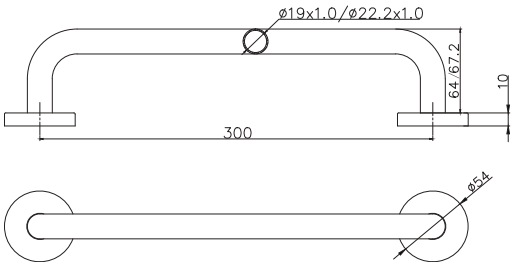

SKU	DESCRIPTION	UOM	FIN	MAT	PKG	WGT
35-9004-8230-19-31-50	D-Type pull handle, one side fixing with escutcheon, SS 304, concealed fixing, O/A300xØ19mm, SSM, Box	PC	SS MATT	SS 304	BOX	610
35-9004-8230-22-31-50	D-Type pull handle, one side fixing with escutcheon, SS 304, concealed fixing, O/A300xØ22mm, SSM, Box	PC	SS MATT	SS 304	BOX	610

Stainless steel pull handles
Single pull handle on plate

Specifications:
- AISI grade 304
- D Handle on plate with “PULL” marking
- Plate size 300x100x2mm
- Handle size 200xØ19

Features:
- Satin stainless steel finish
- Special sizes on request for a minimum order quantity

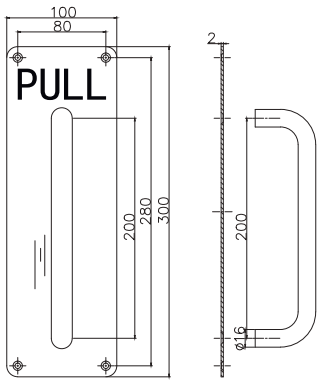

SKU	DESCRIPTION	UOM	FIN	MAT	PKG	WGT
35-9004-8820-19-31-50	Single pull handle on 300x100mm plate	PR	SS MATT	SS 304	BOX	

Stainless steel pull handles
Back to back H pull handle set

Specifications:
- AISI grade 304
- T-shape, back to back fixing
- Length 600mm or 750mm, Ø32mm
- Fixing centre size 450mm or 6000mm

Features:
- Satin stainless steel finish
- Special sizes on request for a minimum order quantity

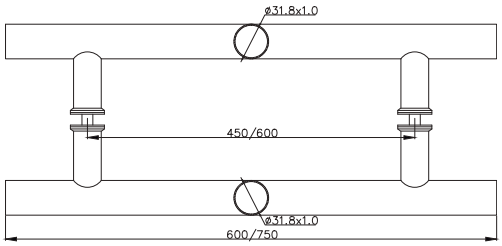

SKU	DESCRIPTION	UOM	FIN	MAT	PKG	WGT
35-9004-8445-32-31-50	H-Type pull handle, back to back fixing, SS 304, O/A600, C/C450xØ32mm, SSM, Box	PR	SS MATT	SS 304	BOX	1160
35-9004-8460-32-31-50	H-Type pull handle, back to back fixing, SS 304, O/A750, C/C600xØ32mm, SSM, Box	PR	SS MATT	SS 304	BOX	1430

Stainless steel pull handles
Back to back D pull handle set

Specifications:
- AISI grade 304
- D-shape, back to back fixing
- Fixing centre size 300mm or 450mm, Ø32mm

Features:
- Satin stainless steel finish
- Special sizes on request for a minimum order quantity

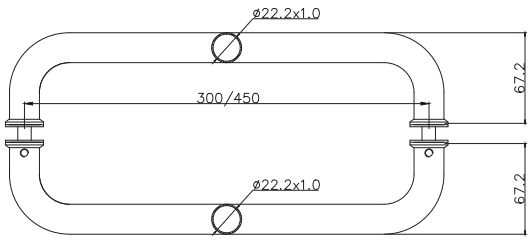

SKU	DESCRIPTION	UOM	FIN	MAT	PKG	WGT
35-9004-8330-32-31-50	D-Type pull handle, back to back fixing, SS 304, O/A300xØ32mm, SSM, Box	PR	SS MATT	SS 304	BOX	1160
35-9004-8345-32-31-50	D-Type pull handle, back to back fixing, SS 304, O/A450xØ32mm, SSM, Box	PR	SS MATT	SS 304	BOX	1430

Stainless steel pull handles

Back to back C pull handle set

Specifications:
- AISI grade 304
- C-shape, back to back fixing
- Fixing centre size 300mm, Ø32mm

Features:
- Satin stainless steel finish
- Special sizes on request for a minimum order quantity

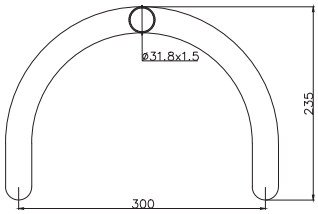

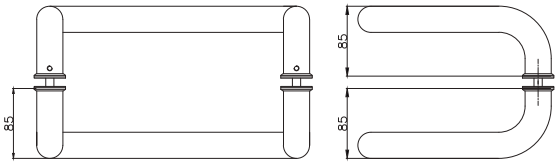

SKU	DESCRIPTION	UOM	FIN	MAT	PKG	WGT
35-9004-8530-32-31-50	C-Type pull handle, back to back fixing, SS 304, O/A300xØ32mm, SSM, Box	PR	SS MATT	SS 304	BOX	912

Stainless steel pull handles

Back to back cranked D pull handle set

Specifications:
- AISI grade 304
- Cranked D-shape, back to back fixing
- Fixing centre size 300mm, Ø32mm

Features:
- Satin stainless steel finish
- Special sizes on request for a minimum order quantity

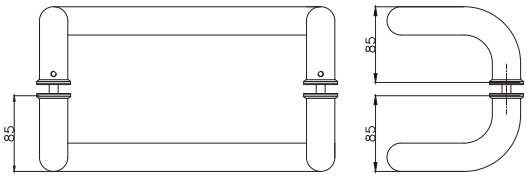

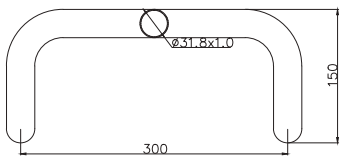

SKU	DESCRIPTION	UOM	FIN	MAT	PKG	WGT
35-9004-8630-32-31-50	D-Crank Type pull handle, back to back fixing, SS 304, O/A300xØ32mm, SSM, Box	PR	SS MATT	SS 304	BOX	1140

Mortice Locks

Yale

Mortice Locks: Door Direction

Depending on the pivot direction of a door, a door is classified as a left and right hand door. The door direction or side definition according to DIN 107 is determined as follows:

Visible position of the door hinges on the left = DIN left
Visible position of the door hinges on the right = DIN right

Common definitions derived from the access direction:

In accordance with the door directions, the mortice locks are also classified as DIN left and DIN right hand locks:

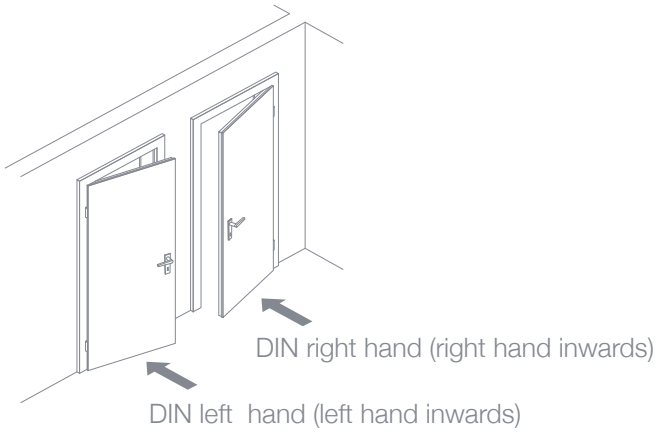

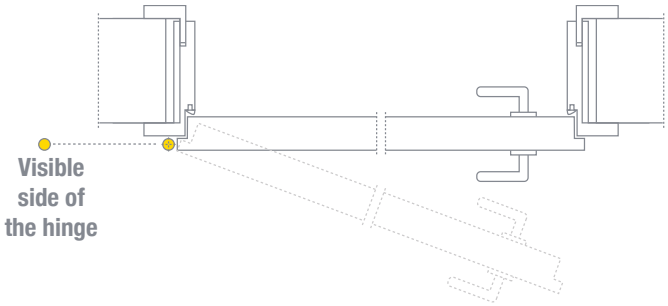

DIN LEFT

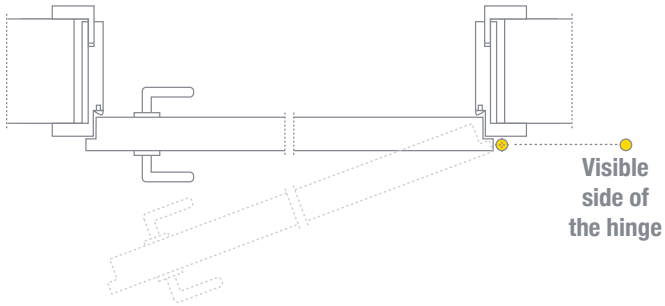

DIN RIGHT

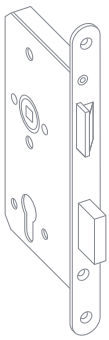

DIN left hand lock (the straight side of the latch points to the left)

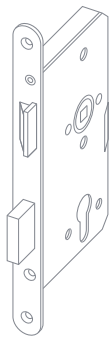

DIN right hand lock (the straight side of the latch points to the right)

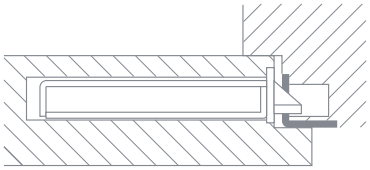

Profile of a rebated door with mortice lock (forend protruding on one side)

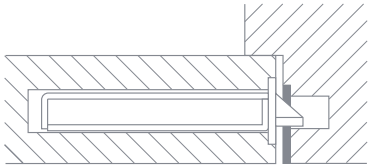

Profile of a flush door with mortice lock (forend protrudes on both sides)

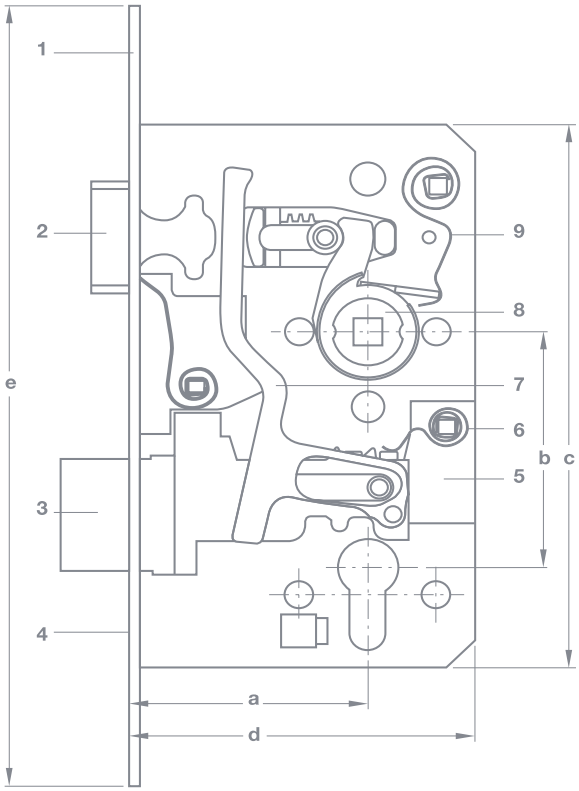

1 Forend
2 Latch
3 Deadbolt
4 Screw channel for profile cylinder
5 Tumbler
6 Tumbler spring
7 Key action
8 Lever follower
9 Counter spring

a Backset
b Distance
c Case height
d Case width
e Forend length
f Forend width

Scope:

This standard covers the requirement and test methods for durability, strength, security and function of all types of mechanical locks and latches (including associated or separately locking plates), intended for use on pedestrian doors in buildings. Excluding electro-mechanically operated locks and striking plates, multipoint locks and their locking plates, locks for windows, padlocks, locks for safes, furniture locks and prison locks.

Classification:

The standard classifies locks and latches using the 11 digit coding system. Each digit relates to a particular feature of the product measured against the standards performance requirements.

2
(1-3)

Digit 1: Category of use
Classification is in three grades, grade 1 being the lowest

Grade 1: Low frequency. For use by people with a high incentive to exercise care and a small chance of misuse, e.g internal residential doors.

Grade 2: Medium frequency. For use by people with some incentive to exercise care but where there is some chance of misuse, e.g. internal office doors.

Grade 3: High frequency. For use by public or others with little incentive to exercise care and with a high chance of misuse, e.g. public doors

Digit 2: Durability

Twelve grades of durability are identified:

Grade A: 50,000 cycles, no load on latch bolt
Grade B: 100,000 cycles, no load on latch bolt
Grade C: 200,000 cycles, no load on latch bolt
Grade F: 50,000 cycles, 10N load on latch bolt
Grade G: 100,000 cycles, 10N load on latch bolt
Grade H: 200,000 cycles, 10N load on latch bolt
Grade L: 100,000 cycles, 25N load on latch bolt
Grade M: 200,000 cycles, 25N load on latch bolt
Grade R: 100,000 cycles, 50N load on latch bolt
Grade S: 200,000 cycles, 50N load on latch bolt
Grade W: 100,000 cycles, 120N load on latch bolt
Grade X: 200,000 cycles, 120N load on latch bolt

Digit 3 - Door mass and closing force

Nine grades of door mass and closing force are identified:

Grade 1: Up to 100 kg door mass; 50N maximum closing force
Grade 2: Up to 200 kg door mass; 50N maximum closing force
Grade 3: Up to 200 kg door mass or specified by the manufacturer; 50N maximum closing force
Grade 4: Up to 100 kg door mass; 25N maximum closing force
Grade 5: Up to 200 kg door mass; 25N maximum closing force
Grade 6: Up to 200 kg door mass or specified by the manufacturer; 25N maximum closing force
Grade 7: Up to 100 kg door mass; 15N maximum closing force
Grade 8: Up to 200 kg door mass; 15N maximum closing force
Grade 9: Up to 200 kg door mass or specified by the manufacturer; 15N maximum closing force

Digit 4 - Fire resistance

Two grades of suitability for use on fire/smoke doors are identified:

Grade 0: Not approved for use on fire/smoke door assemblies
Grade 1: Suitable for use on fire/smoke door assemblies tested to EN1634-1 etc.

Note 1: A grade 1 classification means only that the lock has been designed for use on fire/smoke control doors; the actual fire performance achieved (e.g. fire integrity of 30 minutes on a partially glazed timber door etc.) will be contained in a separate fire test report.

Note 2: Where a product is intended for fire/smoke use (i.e. “1” in box 4), it must be possible to demonstrate compliance with the Essential Requirements of the Construction Products (Amendments) Regulations. It is recommended that the product should bear the CE mark.

Digit 5: Safety

Only one grade of safety is identified:

Note: A lock or latch conforming to this standard can, at the same time, also be part of an exit device conforming to EN179 or EN1125

Digit 6 - Corrosion resistance and temperature

Eight grades of corrosion resistance are identified:

Grade 0: No defined corrosion resistance; no temperature requirement

Grade A: Low corrosion resistance; no temperature requirement

Grade B: Moderate corrosion resistance; no temperature requirement

Grade C: High corrosion resistance; no temperature requirement

Grade D: Very high corrosion resistance; no temperature requirement

Grade E: Moderate corrosion resistance; temperature requirement: from -20°C to +80°C

Grade F: High corrosion resistance; temperature requirement: from -20°C to +80°C

Grade G: Very high corrosion resistance; temperature requirement: from -20°C to +80°C

Digit 7 - Security and drill resistance

Seven grades of security and drill resistance are identified:

Grade 1: Minimum security and no drill resistance

Grade 2: Low security and no drill resistance

Grade 3: Medium security and no drill resistance

Grade 4: High security and no drill resistance

Grade 5: High security with drill resistance

Grade 6: Very high security and no drill resistance

Grade 7: Very high security with drill resistance

Digit 8 - Field of door application.

Fifteen grades of door application are identified in the table below:

Grade	Type	Application 1	Application 2	Application 3
A	Mortice	Unrestricted application	–	–
B	Mortice	Hinged door	–	–
C	Mortice	Sliding door	–	–
D	Rim	Unrestricted application	–	–
E	Rim	Hinged door	–	–
F	Rim	Sliding door	–	–
G	Bored lock	Unrestricted application	–	–
H	Mortice	Hinged door	Supported	–
J	Rim	Hinged door	Inwards	–
K	Mortice	Hinged door	–	Locked from inside
L	Mortice	Sliding door	–	Locked from inside
M	Rim	Hinged door		Locked from inside
N	Rim	Sliding door	–	Locked from inside
P	Mortice	Hinged door	Supported	Locked from inside
R	Rim	Hinged door	Inwards	Locked from inside

Digit 9 - Type of key operation and locking

Nine grades of type of key operation and locking are identified:

Grade 0: Not applicable

Grade A: Cylinder lock or latch; manual locking

Grade B: Cylinder lock or latch; automatic locking

Grade C: Cylinder lock or latch; manual locking with intermediate locking

Grade D: Lever lock or latch; manual locking

Grade E: Lever lock or latch; automatic locking

Grade F: Lever lock or latch; manual locking with intermediate locking

Grade G: Lock or latch without key operation; manual locking

Grade H: Lock without key operation; automatic locking

Digit 10 - Type of spindle operation

Five grades of spindle operation are identified:

Grade 0: Lock without follower

Grade 1: Lock with sprung lever or knob

Grade 2: Lock with light unsprung lever

Grade 3: Lock with heavy unsprung lever

Grade 4: Lock with manufacturer's own specification furniture

Digit 11 - Key identification

Nine grades of key identification are identified:

Grade 0: No requirement

Grade A: Minimum three detaining elements

Grade B: Minimum five detaining elements

Grade C: Minimum five detaining elements, extended number of effective differs

Grade D: Minimum six detaining elements

Grade E: Minimum six detaining elements, extended number of effective differs

Grade F: Minimum seven detaining elements

Grade G: Minimum seven detaining elements, extended number of effective differs

Grade H: Minimum eight detaining elements, extended number of effective differs

Note: This applies only to lever locks: cylinders are assessed to BS EN1303: 1998

Classification code:

:2:H:5:1:0:E:5:A:F:2:C:

Code shown using DHF graphic icons:
EN12209

EXAMPLE:

This indicates a mechanically operated lock and locking plate intended for use in situations where there is an incentive to exercise care; that will withstand a durability of 200,000 cycles with 10N side load on the latch bolt on a door of up to 200 kg in mass; that will close with a maximum force of 25N; that is suitable for use on a fire/smoke resisting door; that has no safety requirement; that has moderate corrosion resistance over a temperature range of -20°C to +80°C; that has high security and drill resistance; that is suitable for unsprung furniture; and that has five detaining elements with a minimum of 10, 000 differs.

H Series
72mm Sashlock

Specifications:
- Heavy duty sashlock with 72mm centres
- Backset 55mm with option of 60mm on request
- Follower 8x8mm
- Through fixing holes with 38mm centres
- Stainless steel 304 front and strike plate
- Square front and strike plate with option for radius type on request
- Stainless steel 304 latch and deadbolt
- 20mm double throw deadbolt
- Grade 8
- Door Mass upto 200 Kg at max. Closing force of 15N
- 200,000 Cycles Tested

Features:
- Tested to EN12209:2003/AC 2005 - suitable for public doors
- CE certified - suitable for steel fire doors upto 200kg, 240 minutes for metal doors and 120 minutes for timber doors.
- Latch operated by handle or cylinder
- Reversible for left or right hand door

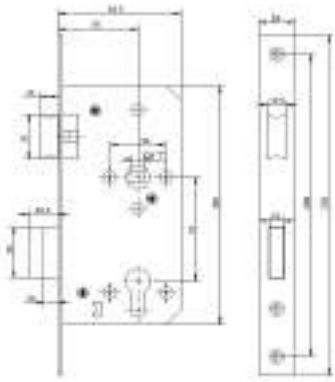

SKU	DESCRIPTION	UOM	FIN	MAT	PKG	WGT
20-H372-001S-55-3111	H Series heavy duty sashlock, 55mm backset, 72mm Center, square fr end, SS matt, CE	PC	SSM	SS 304	BOX	700
20-H372-001S-60-3111	H Series heavy duty sashlock, 60mm backset, 72mm Center, square fr end, SS matt, CE	PC	SSM	SS 304	BOX	700

Certificate available on request.

H Series
72mm Deadlock

Specifications:
- Heavy duty deadlock
- Backset 55mm with option of 60mm on request
- Stainless steel 304 front and strike plate
- Square front and strike plate with option for radius type on request
- Stainless steel 304 deadbolt
- 20mm double throw deadbolt
- Grade 8
- Door Mass upto 200 Kg at max. Closing force of 15N
- 200,000 Cycles Tested

Features:
- Tested to EN12209:2003/AC 2005 - suitable for public doors
- CE certified - suitable for steel fire doors upto 200kg, 240 minutes for metal doors and 120 minutes for timber doors

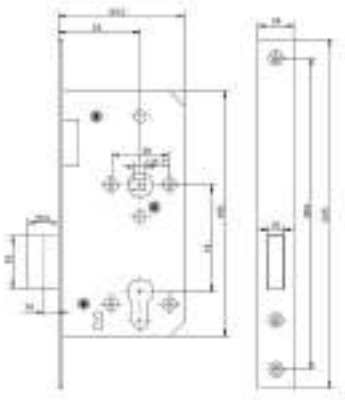

SKU	DESCRIPTION	UOM	FIN	MAT	PKG	WGT
20-H372-002S-55-3111	H Series heavy duty deadlock, 55mm backset, 72mm Center, square fr end, SS matt, CE	PC	SSM	SS 304	BOX	700
20-H372-002S-60-3111	H Series heavy duty deadlock, 60mm backset, 72mm Center, square fr end, SS matt, CE	PC	SSM	SS 304	BOX	700

Certificate available on request.

H Series
72mm Latch

Specifications:
- Heavy duty mortice latch
- Backset 55mm with option of 60mm on request
- Follower 8x8mm
- Through fixing holes with 38mm centres
- Stainless steel 304 front and strike plate
- Square front and strike plate with option of radius type on request
- Stainless steel 304 latch
- Grade 8
- Door Mass upto 200 Kg at max. Closing force of 15N
- 200,000 Cycles Tested

Features:
- Tested to EN12209:2003/AC 2005 - suitable for public doors
- CE certified - suitable for steel fire doors, 240 minutes for metal doors and 120 minutes for timber doors
- Latch operated by handle only
- Reversible for left or right hand doors

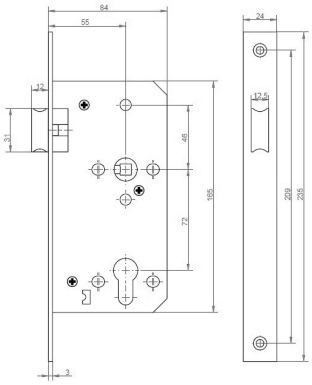

SKU	DESCRIPTION	UOM	FIN	MAT	PKG	WGT
20-H372-003S-55-3111	H Series heavy duty latchlock, 55mm backset, 72mm Center, square fr end, SS matt, CE	PC	SSM	SS 304	BOX	700
20-H372-003S-60-3111	H Series heavy duty latchlock, 60mm backset, 72mm Center, square fr end, SS matt, CE	PC	SSM	SS 304	BOX	700

Certificate available on request.

H Series
72mm Nightlatch

Specifications:
- Heavy duty nightlatch with 72mm centres
- Backset 55mm with option of 60mm on request
- Follower 8x8mm
- Through fixing holes with 38mm centres
- Stainless steel 304 front and strike plate
- Square front and strike plate with option of radius type on request
- Stainless steel 304 latch
- Grade 8
- Door Mass upto 200 Kg at max. Closing force of 15N
- 200,000 Cycles Tested

Features:
- Tested to EN12209:2003 - suitable for public doors
- CE certified - suitable for fire doors. Fire Rated 240 minutes for metal doors and 120 minutes for timber doors
- Latch operated by handle or cylinder
- Reversible for left or right hand doors

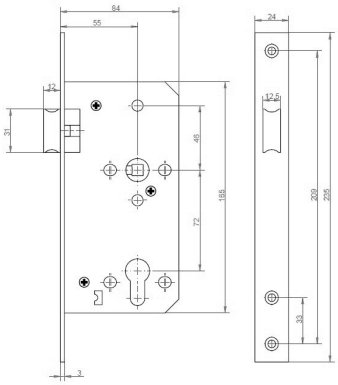

SKU	DESCRIPTION	UOM	FIN	MAT	PKG	WGT
20-H372-003S-55-3111	H Series heavy duty nightlatch, 55mm backset, 72mm Center, square fr end, SS matt, CE	PC	SSM	SS 304	BOX	700
20-H372-003S-60-3111	H Series heavy duty nightlatch, 60mm backset, 72mm Center, square fr end, SS matt, CE	PC	SSM	SS 304	BOX	700

Certificate available on request.

H Series
78mm Bathroom Lock

Specifications:
- Heavy duty bathroom lock with 78mm centres
- Backset 55mm with option of 60mm on request
- Follower for latch and deadbolt 8x8mm
- Through fixing holes with 38mm centres
- Stainless steel 304 front and strike plate
- Square front and strike plate with option for radius type on request
- Stainless steel 304 latch and deadbolt
- 20mm single throw deadbolt
- Grade 8
- Door Mass upto 200 Kg at max. Closing force of 15N
- 200,000 Cycles Tested

Features:
- Latch operated by handle
- Deadbolt operated by privacy set with 8x8mm spindle
- Reversible for left or right hand door

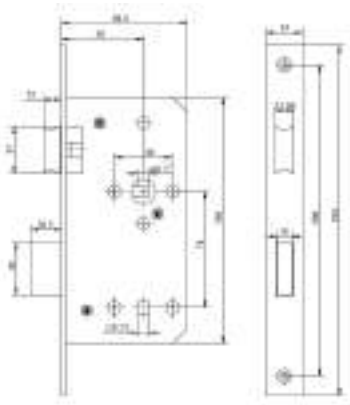

SKU	DESCRIPTION	UOM	FIN	MAT	PKG	WGT
20-H372-007S-55-3111	H Series heavy duty, bathroom, 55mm backset, 78mm Center, square fr end, SS matt	PC	SSM	SS 304	BOX	700
20-H372-007S-60-3111	H Series heavy duty, bathroom, 60mm backset, 78mm Center, square fr end, SS matt	PC	SSM	SS 304	BOX	700

Certificate available on request.

C Series
72mm Sashlock

Specifications:
- Sashlock with 72mm centres
- Backset 55mm with option of 60mm on request
- Follower 8x8mm
- Through fixing holes with 38mm centres
- Stainless steel 304 front and strike plate
- Square front and strike plate with option of radius type on request
- Brass latch and steel deadbolt
- 20mm double throw deadbolt
- Grade 8
- Door Mass upto 200 Kg at max. Closing force of 15N
- 200,000 Cycles Tested

Features:
- Tested to EN12209:2003/AC 2005 - suitable for public doors
- CE certified - suitable for fire doors. Fire Rated 240 minutes for metal doors and 120 minutes for timber doors
- Latch operated by handle or cylinder
- Reversible for left or right hand doors

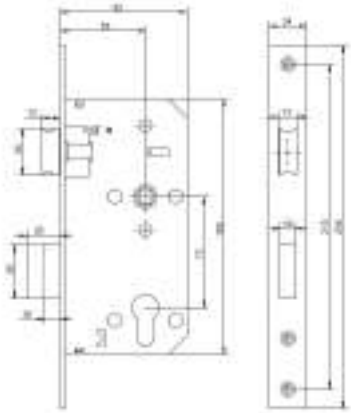

SKU	DESCRIPTION	UOM	FIN	MAT	PKG	WGT
20-C272-001S-55-3111	C Series sashlock, 55mm backset, 72mm Center, square fr end, SS matt, CE	PC	SSM	BRASS	BOX	700
20-C272-001S-60-3111	C Series sashlock, 60mm backset, 72mm Center, square fr end, SS matt, CE	PC	SSM	BRASS	BOX	700

Certificate available on request.

C Series
72mm Deadlock

Specifications:
- Deadlock 72mm size
- Backset 55mm with option of 60mm on request
- Stainless steel 304 front and strike plate
- Square front and strike plate with option for radius type on request
- Brass latch and steel deadbolt
- 20mm double throw deadbolt
- Grade 7
- Door Mass upto 100 Kg at max. Closing force of 15N
- 200,000 Cycles Tested

Features:
- Tested to EN12209:2003/AC 2005 - suitable for public doors
- CE certified - suitable for fire doors. Fire Rated 240 minutes for metal doors and 120 minutes for timber doors
- Satin stainless steel finish
- Reversible for left or right hand door

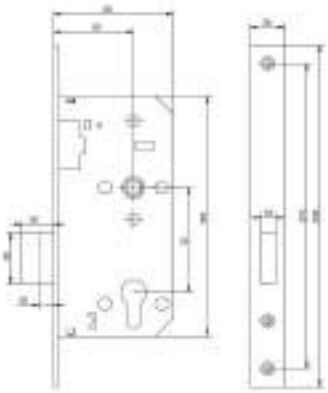

SKU	DESCRIPTION	UOM	FIN	MAT	PKG	WGT
20-C272-002S-55-3111	C Series deadlock, 55mm backset, 72mm Center, square fr end, SS matt, CE	PC	SSM	BRASS	BOX	700
20-C272-002S-60-3111	C Series deadlock, 60mm backset, 72mm Center, square fr end, SS matt, CE	PC	SSM	BRASS	BOX	700

Certificate available on request.

C Series
72mm Latch

Specifications:
- Mortice Latch
- Backset 55mm with option of 60mm on request
- Follower 8x8mm
- Through fixing holes with 38mm centres
- Stainless steel 304 front and strike plate
- Square front and strike plate with option of radius type on request
- Brass latch
- Grade 7
- Door Mass upto 100 Kg at max. Closing force of 15N
- 200,000 Cycles Tested

Features:
- Tested to EN12209:2003/AC 2005 - suitable for public doors
- CE certified - suitable for fire doors. Fire Rated 240 minutes for metal doors and 120 minutes for timber doors
- Latch operated by handle only
- Reversible for left or right hand doors

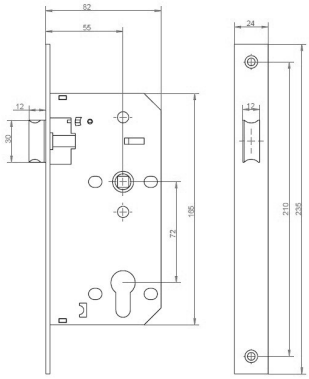

SKU	DESCRIPTION	UOM	FIN	MAT	PKG	WGT
20-C272-003S-55-3111	C Series latchlock, 55mm backset, 72mm Center, square fr end, SS matt, CE	PC	SSM	BRASS	BOX	700
20-C272-003S-60-3111	C Series latchlock, 60mm backset, 72mm Center, square fr end, SS matt, CE	PC	SSM	BRASS	BOX	700

Certificate available on request.

C Series
72mm Nightlatch

Specifications:
- Nightlatch with 72mm centres
- Backset 55mm with option of 60mm on request
- Follower 8x8mm
- Through fixing holes with 38mm centres
- Stainless steel 304 front and strike plate
- Square front and strike plate with option of radius type on request
- Brass latch

Features:
- Tested to EN12209:2003/AC 2005 - suitable for public doors
- CE certified - suitable for fire doors. Fire Rated 240 minutes for metal doors and 120 minutes for timber doors
- Latch operated by handle or cylinder
- Reversible for left or right hand doors

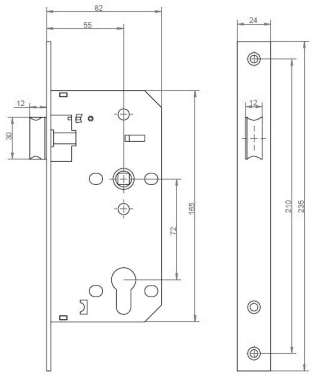

SKU	DESCRIPTION	UOM	FIN	MAT	PKG	WGT
20-C272-004S-55-3111	C Series nightlatch, 55mm backset, 72mm Center, square fr end, SS matt, CE	PC	SSM	BRASS	BOX	700
20-C272-004S-60-3111	C Series nightlatch, 60mm backset, 72mm Center, square fr end, SS matt, CE	PC	SSM	BRASS	BOX	700

Certificate available on request.

C Series
78mm Bathroom lock

Specifications:
- Bathroom lock with 72mm centres
- Backset 55mm with option of 60mm on request
- Follower for latch and deadbolt 8x8mm
- Through fixing holes with 38mm centres
- Stainless steel 304 front and strike plate
- Square front and strike plate with option for radius type on request
- Brass latch and steel deadbolt
- 20mm single throw deadbolt

Features:
- Latch operated by handle
- Deadbolt operated by privacy set with 8x8mm spindle
- Reversible for left or right hand door

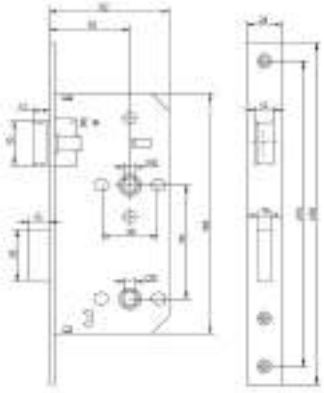

SKU	DESCRIPTION	UOM	FIN	MAT	PKG	WGT
20-C272-007S-55-3111	C Series, bathroom, 55mm backset, 72mm Center, square fr end, SS matt	PC	SSM	BRASS	BOX	700
20-C272-007S-60-3111	C Series, bathroom, 60mm backset, 72mm Center, square fr end, SS matt	PC	SSM	BRASS	BOX	700

Certificate available on request.

52X Series

Specifications:
- Lock case with 85mm centres
- Backset options 40, 45, 50 and 60mm
- Through fixing holes with 38mm centres for rosette handles
- Brass latch and steel deadbolt
- Square or radius front and strike plate
- Front plate 240x22x3mm
- Strike plate 238x25x1.5mm
- 20mm double throw deadbolt

Features:
- Satin nickle or polished brass finish
- Latch and deadbolt finish matched with front plate
- Latch operated by handle or cylinder
- Tested to EN12209:2003

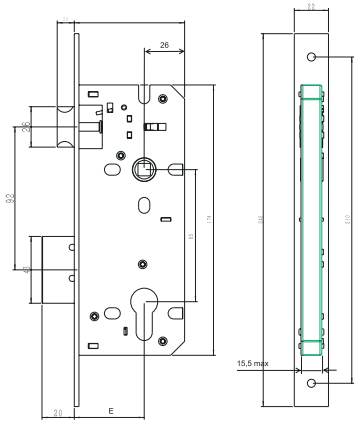

SKU	DESCRIPTION	UOM	FIN	MAT	PKG	WGT
52X0040	52X series mortice lock, sash lock, Sq fr end, BS40mm CN85mm, Polish Brass, Box	PC	PB	BRASS	BOX	640
52X00400S2	52X series mortice lock, sash lock, Sq fr end, BS40mm CN85mm, Satin Nickel, Box	PC	SN	BRASS	BOX	640
52X1040	52X series mortice lock, sash lock, Round fr end, BS40mm CN85mm, Polish Brass, Box	PC	PB	BRASS	BOX	640
52X10400S2	52X series mortice lock, sash lock, Round fr end, BS40mm CN85mm, Satin Nickel, Box	PC	SN	BRASS	BOX	640
52X0045	52X series mortice lock, sash lock, Sq fr end, BS45mm CN85mm, Polish Brass, Box	PC	PB	BRASS	BOX	655
52X00450S2	52X series mortice lock, sash lock, Sq fr end, BS45mm CN85mm, Satin Nickel, Box	PC	SN	BRASS	BOX	655
52X1045	52X series mortice lock, sash lock, Round fr end, BS45mm CN85mm, Polish Brass, Box	PC	PB	BRASS	BOX	655
52X10450S2	52X series mortice lock, sash lock, Round fr end, BS45mm CN85mm, Satin Nickel, Box	PC	SN	BRASS	BOX	655
52X0050	52X series mortice lock, sash lock, Sq fr end, BS50mm CN85mm, Polish Brass, Box	PC	PB	BRASS	BOX	700
52X00500S2	52X series mortice lock, sash lock, Sq fr end, BS50mm CN85mm, Satin Nickel, Box	PC	SN	BRASS	BOX	700
52X1050	52X series mortice lock, sash lock, Round fr end, BS50mm CN85mm, Polish Brass, Box	PC	PB	BRASS	BOX	700
52X10500S2	52X series mortice lock, sash lock, Round fr end, BS50mm CN85mm, Satin Nickel, Box	PC	SN	BRASS	BOX	700
52X0060	52X series mortice lock, sash lock, Sq fr end, BS60mm CN85mm, Polish Brass, Box	PC	PB	BRASS	BOX	750
52X00600S2	52X series mortice lock, sash lock, Sq fr end, BS60mm CN85mm, Satin Nickel, Box	PC	SN	BRASS	BOX	750
52X1060	52X series mortice lock, sash lock, Round fr end, BS60mm CN85mm, Polish Brass, Box	PC	PB	BRASS	BOX	750
52X10600S2	52X series mortice lock, sash lock, Round fr end, BS60mm CN85mm, Satin Nickel, Box	PC	SN	BRASS	BOX	750

Certificate available on request.

510/520 Series

Specifications:
- Latch operated by both key and handle
- Key operated bolt

Features:
- Forend 23mm with square (520) and round edge (510)
- Centre to centre 85mm
- DIN holes on cylinder
- Backsets 20-70mm
- Flat strike plate included
- Solid brass (510) or painted steel (520) finish
- Fixing screws for lock and strike plate included

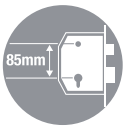

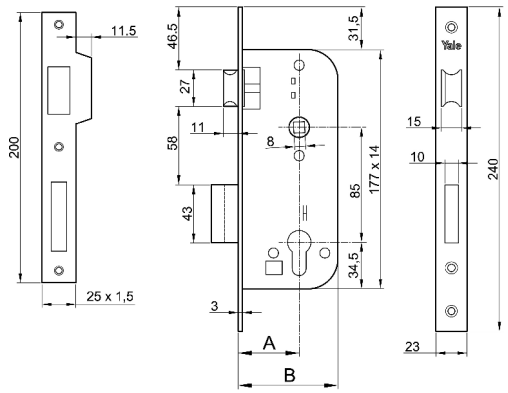

CODE	A	B	CODE	A	B
Y5100020X	20mm	35mm	5201040	40mm	68.5mm
Y5100025X	25mm	40mm	5201045	45mm	73.5mm
Y5100030X	30mm	45mm	5201050	50mm	78.5mm
Y5100035X	35mm	63.5mm	5201060	60mm	88.5mm
Y5100040X	40mm	68.5mm	5203045	45mm	73.5mm
Y5100045X	45mm	73.5mm	5205J40	40mm	68.5mm
Y5100050X	50mm	78.5mm	5205045	45mm	73.5mm
Y5100060X	60mm	88.5mm	5205050	50mm	78.5mm
Y5100070X	70mm	98.5mm	5200320	20mm	35mm
Y5200020X	20mm	35mm	5206325	25mm	40mm
Y5200025X	25mm	40mm	5206330	30mm	45mm
Y5200030X	30mm	45mm	5206335	35mm	63.5mm
Y5200035X	35mm	63.5mm	5206340	40mm	68.5mm
Y5200040X	40mm	68.5mm	5206345	45mm	73.5mm
Y5200045X	45mm	73.5mm	5206350	50mm	78.5mm
Y5200050X	50mm	78.5mm	5206360	60mm	88.5mm
Y5200060X	60mm	88.5mm	5206370	70mm	98.5mm
Y5200070X	70mm	98.5mm			

SKU	DESCRIPTION	UOM	FIN	MAT	PKG	WGT
Y5100020X	510 series mortice sash lock, Round fr end, BS20mm CN85mm, Painted brass, Box	PC	PNT BRS	BRASS	BOX	470
Y5200020X	520 series mortice sash lock, sq fr end, BS20mm CN85mm, Painted Steel, Box	PC	PNT STL	BRASS	BOX	440
Y5100025X	510 series mortice sash lock, Round fr end, BS25mm CN85mm, Painted brass, Box	PC	PNT BRS	BRASS	BOX	480
Y5200025X	520 series mortice sash lock, sq fr end, BS25mm CN85mm, Painted Steel, Box	PC	PNT STL	BRASS	BOX	470
Y5100030X	510 series mortice sash lock, Round fr end, BS30mm CN85mm, Painted brass, Box	PC	PNT BRS	BRASS	BOX	510
Y5200030X	520 series mortice sash lock, sq fr end, BS30mm CN85mm, Painted Steel, Box	PC	PNT STL	BRASS	BOX	510

510/520 Series

SKU	DESCRIPTION	UOM	FIN	MAT	PKG	WGT
Y5100035X	510 series mortice sash lock, Round fr end, BS35mm CN85mm, Painted brass, Box	PC	PNT BRS	BRASS	BOX	670
Y5200035X	520 series mortice sash lock, sq fr end, BS35mm CN85mm, Painted Steel, Box	PC	PNT STL	BRASS	BOX	650
Y5100040X	510 series mortice sash lock, Round fr end, BS40mm CN85mm, Painted brass, Box	PC	PNT BRS	BRASS	BOX	690
Y5200040X	520 series mortice sash lock, sq fr end, BS40mm CN85mm, Painted Steel, Box	PC	PNT STL	BRASS	BOX	690
Y5100045X	510 series mortice sash lock, Round fr end, BS45mm CN85mm, Painted brass, Box	PC	PNT BRS	BRASS	BOX	720
Y5200045X	520 series mortice sash lock, sq fr end, BS45mm CN85mm, Painted Steel, Box	PC	PNT STL	BRASS	BOX	710
Y5100050X	510 series mortice sash lock, Round fr end, BS50mm CN85mm, Painted brass, Box	PC	PNT BRS	BRASS	BOX	760
Y5200050X	520 series mortice sash lock, sq fr end, BS50mm CN85mm, Painted Steel, Box	PC	PNT STL	BRASS	BOX	740
Y5100060X	510 series mortice sash lock, Round fr end, BS60mm CN85mm, Painted brass, Box	PC	PNT BRS	BRASS	BOX	800
Y5200060X	520 series mortice sash lock, sq fr end, BS60mm CN85mm, Painted Steel, Box	PC	PNT STL	BRASS	BOX	800
Y5100070X	510 series mortice sash lock, Round fr end, BS70mm CN85mm, Painted brass, Box	PC	PNT BRS	BRASS	BOX	860
Y5200070X	520 series mortice sash lock, sq fr end, BS70mm CN85mm, Painted Steel, Box	PC	PNT STL	BRASS	BOX	850

521 Series Roller Latch Lock

Specifications:
- Roller adjustable by screw on the forend
- Key operated bolt

Features:
- Forend 23mm with square edge
- Centre to centre 85mm
- DIN holes on cylinder
- Backsets 20-60mm
- Flat strike plate included
- Painted steel finish
- Fixing screws for lock, strike plate and cylinder included

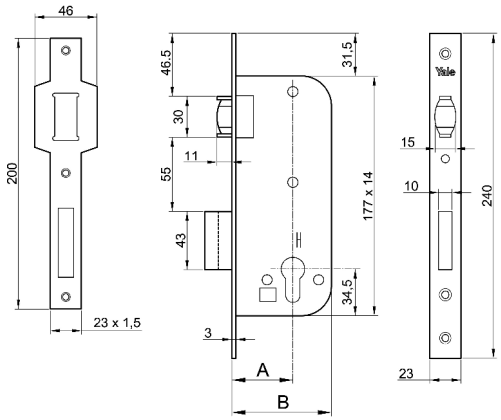

CODE	A	B
5210020	20mm	35mm
5210025	25mm	40mm
5210030	30mm	45mm
5210035	35mm	63.5mm
5210040	40mm	68.5mm
5210045	45mm	73.5mm
5210050	50mm	78.5mm
5210060	60mm	88.5mm

SKU	DESCRIPTION	UOM	FIN	MAT	PKG	WGT
5210020	521 series mortice roller latch lock, single throw, sq fr end, BS20mm CN85mm, Painted Steel, Box	PC	PNT STL	BRASS	BOX	620
5210025	521 series mortice roller latch lock, single throw, sq fr end, BS25mm CN85mm, Painted Steel, Box	PC	PNT STL	BRASS	BOX	620
5210030	521 series mortice roller latch lock, single throw, sq fr end, BS30mm CN85mm, Painted Steel, Box	PC	PNT STL	BRASS	BOX	620
5210035	521 series mortice roller latch lock, double throw, sq fr end, BS35mm CN85mm, Painted Steel, Box	PC	PNT STL	BRASS	BOX	620
5210040	521 series mortice roller latch lock, double throw, sq fr end, BS40mm CN85mm, Painted Steel, Box	PC	PNT STL	BRASS	BOX	620
5210045	521 series mortice roller latch lock, double throw, sq fr end, BS45mm CN85mm, Painted Steel, Box	PC	PNT STL	BRASS	BOX	700
5210050	521 series mortice roller latch lock, double throw, sq fr end, BS50mm CN85mm, Painted Steel, Box	PC	PNT STL	BRASS	BOX	730
5210060	521 series mortice roller latch lock, double throw, sq fr end, BS60mm CN85mm, Painted Steel, Box	PC	PNT STL	BRASS	BOX	780

522 Series Sliding Hook Lock

Specifications:
- Hook latch operated by both key and handle
- Key operated bolt

Features:
- Forend 23mm with square edge
- Centre to centre 85mm
- DIN holes on cylinder
- Backsets 40, 45 and 50mm
- Flat strike plate included
- Painted steel finish
- Fixing screws for lock, strike plate and cylinder included

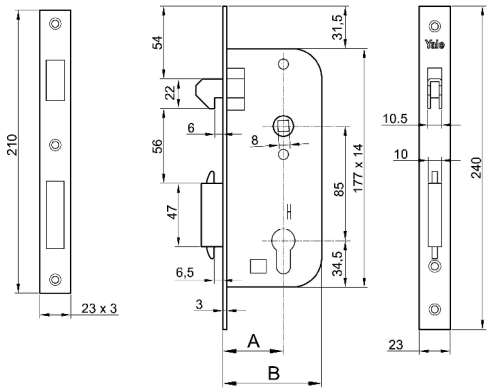

CODE	A	B
5220040	40mm	68.5mm
5220045	45mm	73.5mm
5220050	50mm	78.5mm

SKU	DESCRIPTION	UOM	FIN	MAT	PKG	WGT
5220040	522 series mortice sliding hook lock, single throw, sq fr end, BS40mm CNmm, Painted Steel, Box	PC	PNT STL	BRASS	BOX	760
5220045	522 series mortice sliding hook lock, single throw, sq fr end, BS45mm CNmm, Painted Steel, Box	PC	PNT STL	BRASS	BOX	790
5220050	522 series mortice sliding hook lock, single throw, sq fr end, BS50mm CNmm, Painted Steel, Box	PC	PNT STL	BRASS	BOX	820

Classica Lock Series
85mm Sashlock

Specifications:
- Lock case with 85mm centres
- Standard backset 45mm - other backsets available on request
- Follower 8x8mm
- Through fixing holes with 38mm centres for rosette handles.
- Brass latch and steel deadbolt
- Steel front and strike plate with option of stainless steel
- 20mm double throw deadbolt

Features:
- Finish options - satin nickle, polished brass, antique brass or satin stainless steel
- Latch and deadbolt finish matched with front plate
- Latch operated by handle or cylinder

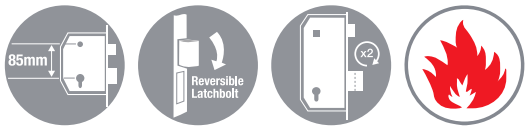

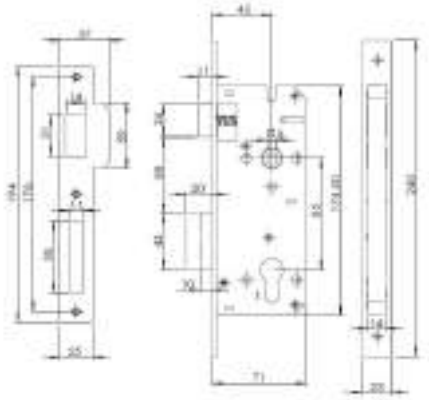

SKU	DESCRIPTION	UOM	FIN	MAT	PKG	WGT
20-8545-0001-00-2211	Classica series mortice sash lock, Sq fr end, BS45mm CN85mm, Satin Nickel, Box	PC	SN	SS 304	BOX	790
20-8545-0001-00-0211	Classica series mortice sash lock, Sq fr end, BS45mm CN85mm, Polish Brass, Box	PC	PB	SS 304	BOX	790
20-8545-0001-00-0911	Classica series mortice sash lock, Sq fr end, BS45mm CN85mm, Antique Brass, Box	PC	AB	SS 304	BOX	790
20-8545-0001-00-3111	Classica series mortice sash lock, Sq fr end, BS45mm CN85mm, SS Matt, Box	PC	SSM	SS 304	BOX	790

Classica Lockset

Specifications:
- Lock case with 85mm centres
- Standard backset 45mm - other backsets available on request
- Follower 8x8mm
- Through fixing holes with 38mm centres for rosette handles.
- Brass latch and steel deadbolt
- Front and strike plate in steel with option of stainless steel
- Brass double cylinder 64mm or 70mm with 3 keys

Features:
- Finish options - satin nickel, polished brass, antique brass or satin stainless steel
- Matching strike plate and cylinder

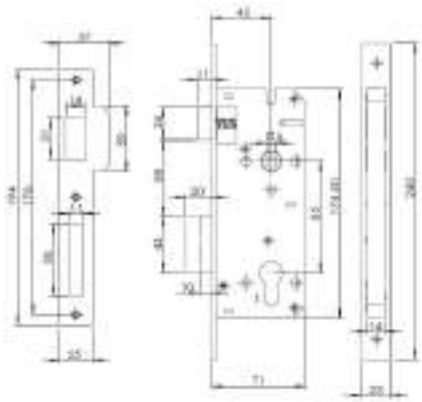

SKU	DESCRIPTION	UOM	FIN	MAT	PKG	WGT
22-8545-S64-KK-2211	Classica series mortice sash lock set, Sq fr end, BS45mm CN85mm, EPC K+K, 64mm=32+32, Satin Nickel, Box	PC	SN	SS 304	BOX	1200
22-8545-S64-KK-0211	Classica series mortice sash lock set, Sq fr end, BS45mm CN85mm, EPC K+K, 64mm=32+32, Polish Brass, Box	PC	PB	SS 304	BOX	1200
22-8545-S64-KK-0911	Classica series mortice sash lock set, Sq fr end, BS45mm CN85mm, EPC K+K, 64mm=32+32, Antique Brass, Box	PC	AB	SS 304	BOX	1200
22-8545-S64-KK-3111	Classica series mortice sash lock set, Sq fr end, BS45mm CN85mm, EPC K+K, 64mm=32+32, SS Matt, Box	PC	SSM	SS 304	BOX	1200
22-8545-S70-KK-2211	Classica series mortice sash lock set, Sq fr end, BS45mm CN85mm, EPC K+K, 70mm=35+35, Satin Nickel, Box	PC	SN	SS 304	BOX	1200
22-8545-S70-KK-0211	Classica series mortice sash lock set, Sq fr end, BS45mm CN85mm, EPC K+K, 70mm=35+35, Polish Brass, Box	PC	PB	SS 304	BOX	1200
22-8545-S70-KK-0911	Classica series mortice sash lock set, Sq fr end, BS45mm CN85mm, EPC K+K, 70mm=35+35, Antique Brass, Box	PC	AB	SS 304	BOX	1200
22-8545-S70-KK-3111	Classica series mortice sash lock set, Sq fr end, BS45mm CN85mm, EPC K+K, 70mm=35+35, SS Matt, Box	PC	SSM	SS 304	BOX	1200
22-8545-S64-CK-22-11	Classica series mortice sash lock set, Sq fr end, BS45mm CN85mm, EPC K+CK, 64MM=32+32,Satin Nickel,Box	SET	Satin Nickel	STEEL	Box	1200
22-8545-S64-CK-02-11	Classica series mortice sash lock set, Sq fr end, BS45mm CN85mm, EPC K+CK, 64MM=32+32,Polish Brass,Box	SET	Polish Brass	STEEL	Box	1200
22-8545-S64-CK-09-11	Classica series mortice sash lock set, Sq fr end, BS45mm CN85mm, EPC K+CK, 64MM=32+32,Antique Brass,Box	SET	Antique Brass	STEEL	Box	1200
22-8545-S70-CK-22-11	Classica series mortice sash lock set, Sq fr end, BS45mm CN85mm, EPC K+CK, 70MM=35+35,Satin Nickel,Box	SET	Satin Nickel	STEEL	Box	1200
22-8545-S70-CK-02-11	Classica series mortice sash lock set, Sq fr end, BS45mm CN85mm, EPC K+CK, 70MM=35+35,Polish Brass,Box	SET	Polish Brass	STEEL	Box	1200
22-8545-S70-CK-09-11	Classica series mortice sash lock set, Sq fr end, BS45mm CN85mm, EPC K+CK, 70MM=35+35,Antique Brass,Box	SET	Antique Brass	STEEL	Box	1200

516 Series Bathroom Lock Case

Specifications:
- Handle operated latch
- Knob operated bolt

Features:
- Forend 23mm with square and round edge
- Centre to centre 85mm
- Din holes on cylinder
- Backsets 40, 45, 50 and 60mm
- Flat strike plate included
- Brass front and strike plate
- Fixing screws for lock and strike plate included

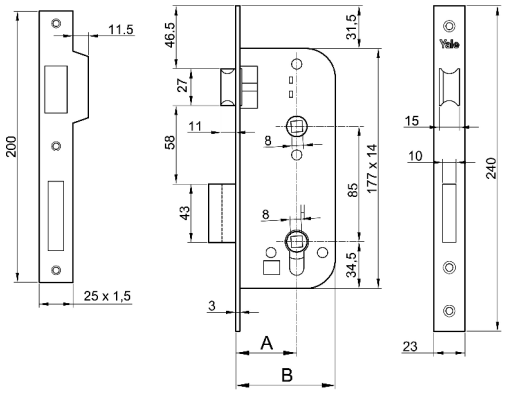

CODE	A	B
5160040	40mm	68.5mm
5160045	45mm	73.5mm
5160050	50mm	78.5mm
5160060	60mm	88.5mm
5162040	40mm	68.5mm
5162045	45mm	73.5mm
5162050	50mm	78.5mm
5162060	60mm	88.5mm

SKU	DESCRIPTION	UOM	FIN	MAT	PKG	WGT
5160040	516 series mortice bathroom lock, double throw, sq fr end, BS40mm CN85mm, Painted brass, Box	PC	PNT BRS	SS 304	BOX	700
5162040	516 series mortice bathroom lock, double throw, Round fr end, BS40mm CN85mm, Painted brass, Box	PC	PNT BRS	SS 304	BOX	700
5160045	516 series mortice bathroom lock, double throw, sq fr end, BS45mm CN85mm, Painted brass, Box	PC	PNT BRS	SS 304	BOX	730
5162045	516 series mortice bathroom lock, double throw, Round fr end, BS45mm CN85mm, Painted brass, Box	PC	PNT BRS	SS 304	BOX	730
5160050	516 series mortice bathroom lock, double throw, sq fr end, BS50mm CN85mm, Painted brass, Box	PC	PNT BRS	SS 304	BOX	750
5162050	516 series mortice bathroom lock, double throw, Round fr end, BS50mm CN85mm, Painted brass, Box	PC	PNT BRS	SS 304	BOX	750
5160060	516 series mortice bathroom lock, double throw, sq fr end, BS60mm CN85mm, Painted brass, Box	PC	PNT BRS	SS 304	BOX	810
5162060	516 series mortice bathroom lock, double throw, Round fr end, BS60mm CN85mm, Painted brass, Box	PC	PNT BRS	SS 304	BOX	810

563 Series Cross Key Cylinder Lock

Specifications:
- Key operated bolt
- 1 or 2 throws

Features:
- Forend 23mm with square edge
- Backsets 25-60mm
- Flat strike plate included
- Painted steel finish
- Fixing screws for lock and strike plate included
- Cross cylinder incorporated in the lock
- 3 keys

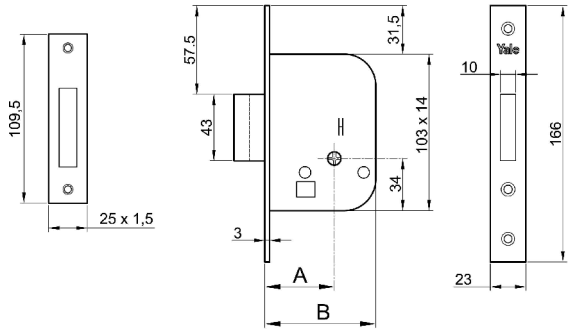

CODE	A	B
5630025	25mm	40mm
5630030	30mm	45mm
5630035	35mm	62mm
5630040	40mm	67mm
5630045	45mm	72mm
5630050	50mm	77mm
5630060	60mm	87mm

SKU	DESCRIPTION	UOM	FIN	MAT	PKG	WGT
5630025	563 series mortice cross key lock, single throw, Sq fr end, BS25mm, Painted Steel, Box	PC	PNT STL	BRASS	BOX	380
5630030	563 series mortice cross key lock, single throw, Sq fr end, BS30mm, Painted Steel, Box	PC	PNT STL	BRASS	BOX	410
5630035	563 series mortice cross key lock, double throw, Sq fr end, BS35mm, Painted Steel, Box	PC	PNT STL	BRASS	BOX	500
5630040	563 series mortice cross key lock, double throw, Sq fr end, BS40mm, Painted Steel, Box	PC	PNT STL	BRASS	BOX	520
5630045	563 series mortice cross key lock, double throw, Sq fr end, BS45mm, Painted Steel, Box	PC	PNT STL	BRASS	BOX	540
5630050	563 series mortice cross key lock, double throw, Sq fr end, BS50mm, Painted Steel, Box	PC	PNT STL	BRASS	BOX	560
5630060	563 series mortice cross key lock, double throw, Sq fr end, BS60mm, Painted Steel, Box	PC	PNT STL	BRASS	BOX	586

56320 Series Cross Key Cylinder Lock

Specifications:
- Key operated bolt
- 4 throws

Features:
- Forend 23mm with square edge
- Backsets 40-70mm
- Flat strike plate included
- Painted steel finish
- Fixing screws for lock and strike plate included
- Cross cylinder incorporated in the lock
- 3 keys

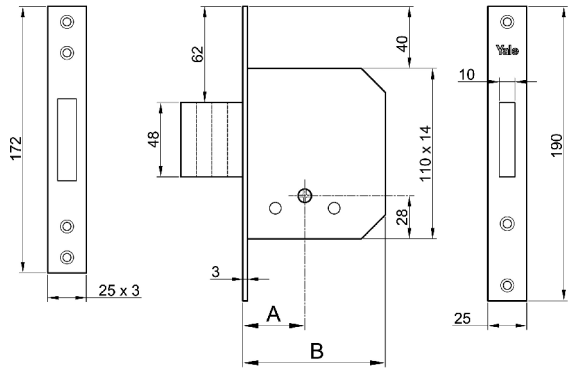

CODE	A	B
5632040	40mm	92mm
5632050	50mm	99.5mm
5632060	60mm	109.5mm
5632070	70mm	119.5mm

SKU	DESCRIPTION	UOM	FIN	MAT	PKG	WGT
5632040	56320 series mortice cross key lock, 4 throw, Sq fr end, BS40mm, Painted Steel, Box	PC	PNT STL	BRASS	BOX	850
5632050	56320 series mortice cross key lock, 4 throw, Sq fr end, BS50mm, Painted Steel, Box	PC	PNT STL	BRASS	BOX	900
5632060	56320 series mortice cross key lock, 4 throw, Sq fr end, BS60mm, Painted Steel, Box	PC	PNT STL	BRASS	BOX	960
5632070	56320 series mortice cross key lock, 4 throw, Sq fr end, BS70mm, Painted Steel, Box	PC	PNT STL	BRASS	BOX	1030

523 Series Mortice Lever Lock

Specifications:
- Key operated bolt

Features:
- Forend 23mm with square edge
- DIN holes on cylinder
- Backsets 20 - 60mm
- Flat strike plate included
- Painted steel finish
- Fixing screws for lock and strike plate included

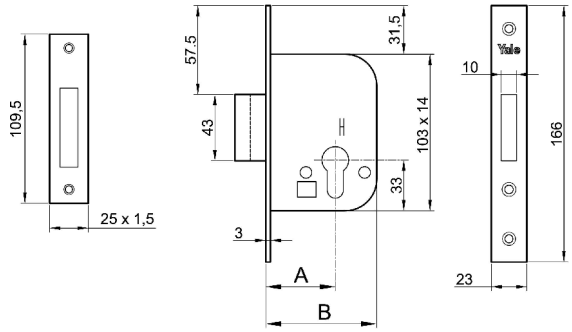

CODE	A	B
5230020	20mm	35mm
5230030	30mm	45mm
5230035	35mm	61.8mm
5230040	40mm	66.8mm
5230045	45mm	71.8mm
5230050	50mm	76.8mm
5230060	60mm	86.8mm

SKU	DESCRIPTION	UOM	FIN	MAT	PKG	WGT
5230020	523 series lever mortice lock, single throw, Sq fr end, BS20mm, Painted Steel, Box	PC	PNT STL	BRASS	BOX	260
5230025	523 series lever mortice lock, single throw, Sq fr end, BS25mm, Painted Steel, Box	PC	PNT STL	BRASS	BOX	280
5230030	523 series lever mortice lock, single throw, Sq fr end, BS30mm, Painted Steel, Box	PC	PNT STL	BRASS	BOX	300
5230035	523 series lever mortice lock, double throw, Sq fr end, BS35mm, Painted Steel, Box	PC	PNT STL	BRASS	BOX	380
5230040	523 series lever mortice lock, double throw, Sq fr end, BS40mm, Painted Steel, Box	PC	PNT STL	BRASS	BOX	390
5230045	523 series lever mortice lock, double throw, Sq fr end, BS45mm, Painted Steel, Box	PC	PNT STL	BRASS	BOX	420
5230050	523 series lever mortice lock, double throw, Sq fr end, BS50mm, Painted Steel, Box	PC	PNT STL	BRASS	BOX	440
5230060	523 series lever mortice lock, double throw, Sq fr end, BS60mm, Painted Steel, Box	PC	PNT STL	BRASS	BOX	460

520 Series Lockset

Specifications:
- Latch operated by both key and handle
- Key operated bolt

Features:
- Forend 23mm with square (520) and round edge (510)
- Centre to centre 85mm
- DIN holes on cylinder
- Backsets 20-70mm
- Flat strike plate included
- Solid brass (510) or painted steel (520) finish
- Fixing screws for lock and strike plate included

SKU	DESCRIPTION	UOM	FIN	MAT	PKG	WGT
Y52062450000028 Y21009620000028	520 series mortice sash lock, sq fr end, BS45mm CN85mm, Painted Steel, Box 210 Series double euro profile cylinder, Key + Key, 62=31mm+31mm, Satin Nickel, Box	SET	SATIN NICKEL	BRASS	BOX	900
Y52071450000028 Y21009710000028	520 series mortice sash lock, sq fr end, BS45mm CN85mm, Painted Steel, Box 210 Series double euro profile cylinder, Key + Key, 70=35mm+35mm, Satin Nickel, Box	SET	SATIN NICKEL	BRASS	BOX	900

Narrow stile lock

Latch type - 22mm forend
For aluminium doors

Specifications:
- Centre distance 85mm
- Backset options 20, 25, 30 and 35mm
- Stainless steel front & strike plate
- Adjustable fixing holes on strike plate

Features:
- Easy reversible latch
- Latch operated by handle or cylinder
- Nickel plated latch and deadbolt
- Stainless steel fixing screws included
- Tested to: BS 5872: 1980 Category A clauses A.14, A.16 & A.17 & EN1670:2007 grade 3*

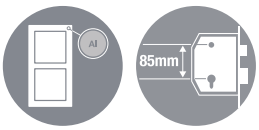

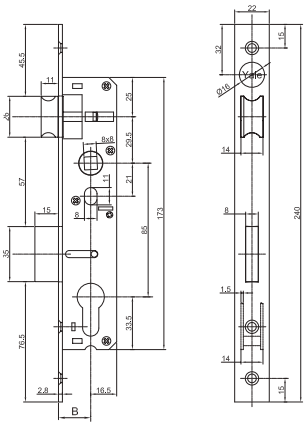

SKU	DESCRIPTION	UOM	FIN	MAT	PKG	WGT
20NLA228520311	Narrow stile Latch and bolt lockcase, SS 304, reversible latch, EN, Grade 3, BS20mm, SS Matt, Box	PC	SS MATT	SS 304	BOX	480
20NLA228525311	Narrow stile Latch and bolt lockcase, SS 304, reversible latch, EN, Grade 3, BS25mm, SS Matt, Box	PC	SS MATT	SS 304	BOX	480
20NLA228530311	Narrow stile Latch and bolt lockcase, SS 304, reversible latch, EN, Grade 3, BS30mm, SS Matt, Box	PC	SS MATT	SS 304	BOX	480
20NLA228535311	Narrow stile Latch and bolt lockcase, SS 304, reversible latch, EN, Grade 3, BS35mm, SS Matt, Box	PC	SS MATT	SS 304	BOX	480

Narrow stile lock

Roller type - 22mm forend
For aluminium doors

Specifications:
- Roller function
- Centre distance 85mm
- Backset options 20, 25, 30 and 35mm
- Stainless steel front & strike plate
- Adjustable fixing holes on strike plate

Features:
- Nickel plated roller and deadbolt
- Stainless steel fixing screws included
- Tested to: BS 5872: 1980 Category A clauses A.14, A.16 & A.17 & EN1670:2007 grade 3*

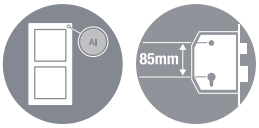

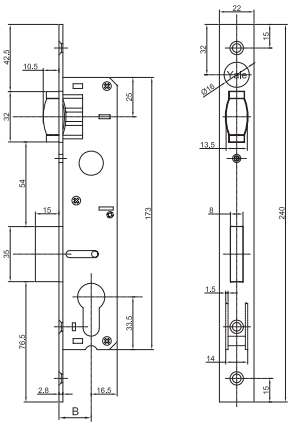

SKU	DESCRIPTION	UOM	FIN	MAT	PKG	WGT
20NRA228520311	Narrow stile rollller latch and bolt lockcase, SS 304, reversible latch, EN, Grade 3, BS20mm, SS Matt, Box	PC	SS MATT	SS 304	BOX	480
20NRA228525311	Narrow stile rollller latch and bolt lockcase, SS 304, reversible latch, EN, Grade 3, BS25mm, SS Matt, Box	PC	SS MATT	SS 304	BOX	480
20NRA228530311	Narrow stile rollller latch and bolt lockcase, SS 304, reversible latch, EN, Grade 3, BS30mm, SS Matt, Box	PC	SS MATT	SS 304	BOX	480
20NRA228535311	Narrow stile rollller latch and bolt lockcase, SS 304, reversible latch, EN, Grade 3, BS35mm, SS Matt, Box	PC	SS MATT	SS 304	BOX	480

New Narrow stile lock

Narrow stile lock plus
For aluminium doors

Specifications:
- Stainless Steel front and strike plate
- Adjustable latch
- Din hole on cylinder
- Backset options 30 and 35mm
- Adjustable fixing holes on strike plate

Features:
- Stainless steel finish

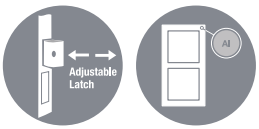

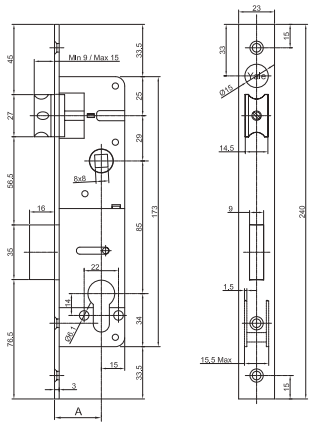

SKU	DESCRIPTION	UOM	FIN	MAT	PKG	WGT
20NSL303111V2	Narrow Plus stile latch and bolt lockcase, SS 304, adjustable latch, BS30mm, SS Matt, Box	PC	SS MATT	SS 304	BOX	480
20NSL353111V2	Narrow Plus stile latch and bolt lockcase, SS 304, adjustable latch, BS35mm, SS Matt, Box	PC	SS MATT	SS 304	BOX	480

Aluminium locks
9A6300

Specifications:
- Key operated hook or bolt

Features:
- Backset 20mm
- Cross cylinder included
- 3 keys
- Throw 1

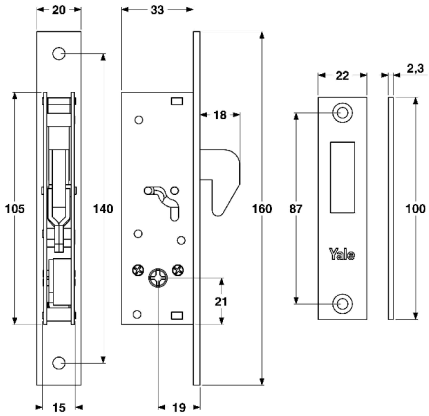

CODE	E
9A63000	20mm
9A63100	20mm

SKU	DESCRIPTION	UOM	FIN	MAT	PKG	WGT
9A63000	9A6300, Series Alum mortice lock, hook & bolt, BS 20mm, Cross key, 3 keys, single throw, hook only, Nickel plated steel, Box	PC	NPS	ALUMINIUM	BOX	330
9A63100	9A6300, Series Alum mortice lock, hook & bolt, BS 20mm, Cross key, 3 keys, single throw, boltonl, Nickel plated steel, Box	PC	NPS	ALUMINIUM	BOX	330

Electric mortice lock

580 Electric mortice lock

Specifications:
- Bolt operated by key only
- Latch operated by key or mechanical electric button

Features:
- Forend 23mm with square edge
- Din holes on cylinder
- Backsets 40, 50 and 60mm
- Strike plate included
- Painted steel finish
- Pair of contacts included
- Fixing screws for lock, strike plate included
- Cylinder to be ordered separately

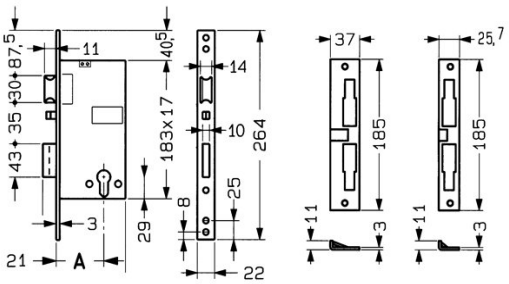

CODE	A
5800040	39.5mm
5800050	49.5mm
5800060	59.5mm

SKU	DESCRIPTION	UOM	FIN	MAT	PKG	WGT
5800040	580 series electrical mortice lock with latch and bolt withdrawal, double throw, Sq fr end, BS40mm, Painted Steel, Box	PC	PNT STL	BRASS	BOX	1020
5800050	580 series electrical mortice lock with latch and bolt withdrawal, double throw, Sq fr end, BS50mm, Painted Steel, Box	PC	PNT STL	BRASS	BOX	1090
5800060	580 series electrical mortice lock with latch and bolt withdrawal, double throw, Sq fr end, BS60mm, Painted Steel, Box	PC	PNT STL	BRASS	BOX	1160

Electric mortice lock

581 Electric mortice lock

Specifications:
- Bolt and latch operated by key or mechanical/electric button.

Features:
- Forend 23mm with square edge
- Din holes on cylinder
- Backsets 40, 50 and 60mm
- Strike plate included
- Painted steel finish
- Pair of contacts included
- Fixing screws for lock, strike plate included
- Cylinder to be ordered separately

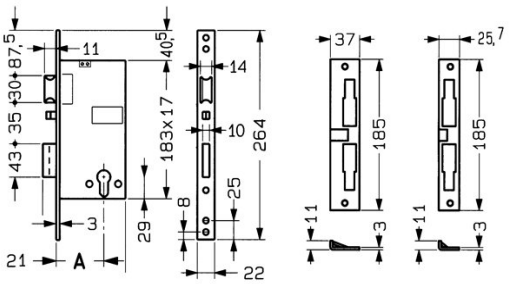

CODE	A
5810040	39.5mm
5810050	49.5mm
5810060	59.5mm

SKU	DESCRIPTION	UOM	FIN	MAT	PKG	WGT
5800040	581 series electrical mortice lock with latch and bolt withdrawal, double throw, Sq fr end, BS40mm, Painted Steel, Box	PC	PNT STL	BRASS	BOX	1040
5800050	581 series electrical mortice lock with latch and bolt withdrawal, double throw, Sq fr end, BS50mm, Painted Steel, Box	PC	PNT STL	BRASS	BOX	1100
5800060	581 series electrical mortice lock with latch and bolt withdrawal, double throw, Sq fr end, BS60mm, Painted Steel, Box	PC	PNT STL	BRASS	BOX	1160

Electrical contacts

Electrical contacts “for latch only locks”
67F05

Specifications:
- By electrical pulse (8 - 12V/0.6 - 0.9A)

Features:
- Forend 25mm with square edge
- Painted steel finish
- Fixing screws included

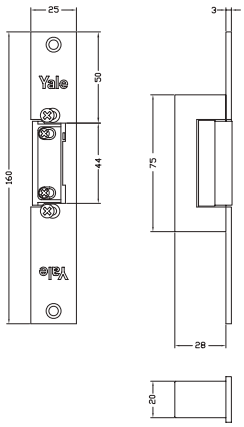

SKU	DESCRIPTION	UOM	FIN	MAT	PKG	WGT
67F0502	67F05 Series electrical strike, for latch only locks, FR25mm, Sq edge, Release limited to the duration of the electrical pulse, Painted steel finish, Box	PC	SN	PNT STEEL	BOX	280
67F0504	67F05 Series electrical strike, for latch only locks, FR25mm, Sq edge, Release by simple electrical pulseprotrusion, pack of pc, Painted steel finish, Box	PC	SN	PNT STEEL	BOX	280

Electrical contacts

Electrical contacts “for latch + bolt locks”

Specifications:
- By electrical pulse (8 - 12V/0.6 - 0.9A)

Features:
- Forend 25mm with square edge
- Painted steel finish
- Fixing screws included

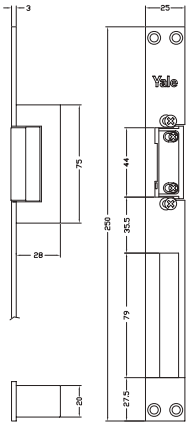

SKU	DESCRIPTION	UOM	FIN	MAT	PKG	WGT
67F0506	67F05 Series electrical strike, for latch & bolt locks, FR25mm, Sq edge, Release limited to the duration of the electrical pulseprotrusion, pack of pc,, Box	PC	SN	PNT STEEL	BOX	310
67F0508	67F05 Series electrical strike, for latch & bolt locks, FR25mm, Sq edge, Release by simple electrical pulseprotrusion, pack of pc,, Box	PC	SN	PNT STEEL	BOX	310

Electrical contacts

Electrical contacts “with angular plate”

Specifications:
- By electrical pulse (8 - 12V/0.6 - 0.9A)

Features:
- Angular forend 32x25mm with square and round edge
- Right and left hand
- Painted steel finish
- Fixing screws included

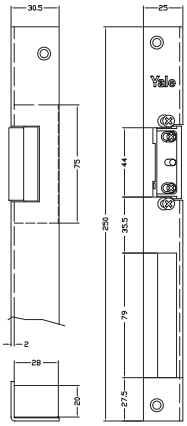

SKU	DESCRIPTION	UOM	FIN	MAT	PKG	WGT
67F05121	67F05 Series electrical strike, for latch & bolt locks, angular plate, right hand door, sq edgeprotrusion, pack of pc,, Box	PC	SN	PNT STEEL	BOX	360
67F05122	67F05 Series electrical strike, for latch & bolt locks, angular plate, left hand door, sq edgeprotrusion, pack of pc,, Box	PC	SN	PNT STEEL	BOX	360
67F05131	67F05 Series electrical strike, for latch & bolt locks, angular plate, right hand door, sq edgeprotrusion, pack of pc,, Box	PC	SN	PNT STEEL	BOX	360
67F05132	67F05 Series electrical strike, for latch & bolt locks, angular plate, left hand door, sq edgeprotrusion, pack of pc,, Box	PC	SN	PNT STEEL	BOX	360

Electrical contacts

Electrical contacts “for panic bars” 67F

Specifications:
- By electrical pulse (8 - 12V/0.6 - 0.9A)

Features:
- Without visible stop
- Supplied with 6 black PVC shims measuring 2mm + 2 measuring 1mm, for adaptation on the most widely used panic bars

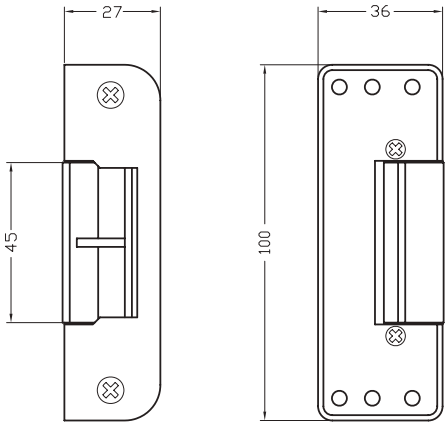

SKU	DESCRIPTION	UOM	FIN	MAT	PKG	WGT
67F0550	67F05 Series electrical strike, for PED, Release by simple electrical pulse. Supplied complete with 6 black PVC shims measuring 2mm + 2 measuring 1mm	PC	SN	BLACK	BOX	560

Rim Locks

Yale

Mechanical rim lock

61000 - Double cylinder rim lock

Specifications:
- Latch operated from outside by key and from inside by pull lever
- Bolt operated by key on inside and outside

Features:
- Double cylinder lock for right and left handed doors
- Backsets 40, 50, 60 and 70mm
- Striker included
- Painted steel finish
- Pair of inside/outside cylinders included
- Cylinder 2200031
- 3 keys

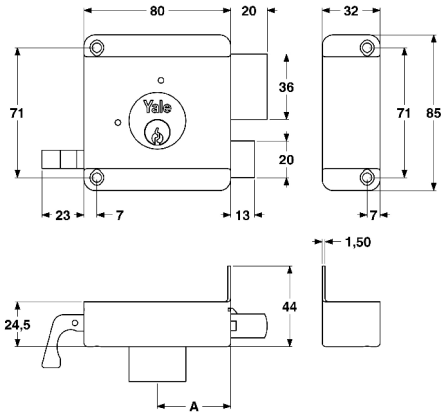

CODE	A	CYLINDER
61000401	40mm dx	2200031
61000501	50mm dx	2200031
61000601	60mm dx	2200031
61000701	70mm dx	2200031
61000402	40mm sx	2200031
61000502	50mm sx	2200031
61000602	60mm sx	2200031
61000702	70mm sx	2200031

SKU	DESCRIPTION	UOM	FIN	MAT	PKG	WGT
61000401	61000 series mechanical rim lock, right hand, double throw, BS40mm, Painted Steel, Box	PC	PNT STL	BRASS	BOX	830
61000402	61000 series mechanical rim lock, left hand, double throw, BS40mm, Painted Steel, Box	PC	PNT STL	BRASS	BOX	830
61000501	61000 series mechanical rim lock, right hand, double throw, BS50mm, Painted Steel, Box	PC	PNT STL	BRASS	BOX	890
61000502	61000 series mechanical rim lock, left hand, double throw, BS50mm, Painted Steel, Box	PC	PNT STL	BRASS	BOX	890
61000601	61000 series mechanical rim lock, right hand, double throw, BS60mm, Painted Steel, Box	PC	PNT STL	BRASS	BOX	980
61000602	61000 series mechanical rim lock, left hand, double throw, BS60mm, Painted Steel, Box	PC	PNT STL	BRASS	BOX	980
61000701	61000 series mechanical rim lock, right hand, double throw, BS70mm, Painted Steel, Box	PC	PNT STL	BRASS	BOX	1020
61000702	61000 series mechanical rim lock, left hand, double throw, BS70mm, Painted Steel, Box	PC	PNT STL	BRASS	BOX	1020

Mechanical rim lock

63000 - Double cylinder rim lock

Specifications:
- Latch operated from outside by key and from inside by pull lever
- Bolt operated by key on inside and outside

Features:
- Double cylinder lock for right and left handed doors
- Backsets 40, 50, 60 and 70mm
- Striker included
- Painted steel finish
- Pair of inside/outside cylinders included
- Cylinder 2200031
- 3 keys

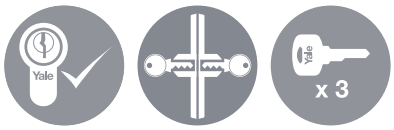

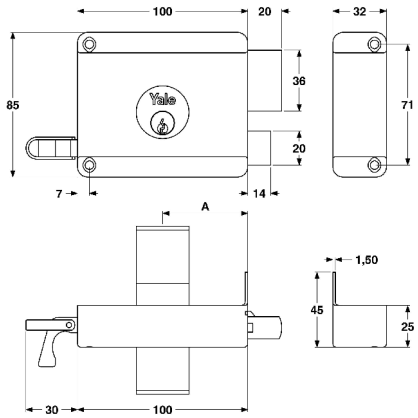

CODE	A	CYLINDER
63000401	40mm dx	2250045
63000501	50mm dx	2250045
63000601	60mm dx	2250045
63000701	70mm dx	2250045
63000402	40mm sx	2250045
63000502	50mm sx	2250045
63000602	60mm sx	2250045
63000702	70mm sx	2250045

SKU	DESCRIPTION	UOM	FIN	MAT	PKG	WGT
63000401	63000 series mechanical rim lock, right hand, double throw, BS40mm, Painted Steel, Box	PC	PNT STL	BRASS	BOX	840
63000402	63000 series mechanical rim lock, left hand, double throw, BS40mm, Painted Steel, Box	PC	PNT STL	BRASS	BOX	840
63000501	63000 series mechanical rim lock, right hand, double throw, BS50mm, Painted Steel, Box	PC	PNT STL	BRASS	BOX	920
63000502	63000 series mechanical rim lock, left hand, double throw, BS50mm, Painted Steel, Box	PC	PNT STL	BRASS	BOX	920
63000601	63000 series mechanical rim lock, right hand, double throw, BS60mm, Painted Steel, Box	PC	PNT STL	BRASS	BOX	980
63000602	63000 series mechanical rim lock, left hand, double throw, BS60mm, Painted Steel, Box	PC	PNT STL	BRASS	BOX	980
63000701	63000 series mechanical rim lock, right hand, double throw, BS70mm, Painted Steel, Box	PC	PNT STL	BRASS	BOX	1040
63000702	63000 series mechanical rim lock, left hand, double throw, BS70mm, Painted Steel, Box	PC	PNT STL	BRASS	BOX	1040

Mechanical rim lock

63060 - Rim lock with square spindle

Specifications:
- Latch operated from outside by key and from inside by handle
- Bolt operated by key on inside and outside

Features:
- Double cylinder lock for right and left handed doors
- Backsets 60mm
- Striker included
- Painted steel finish
- Pair of inside/outside cylinders included
- Cylinder 2250045
- 3 keys

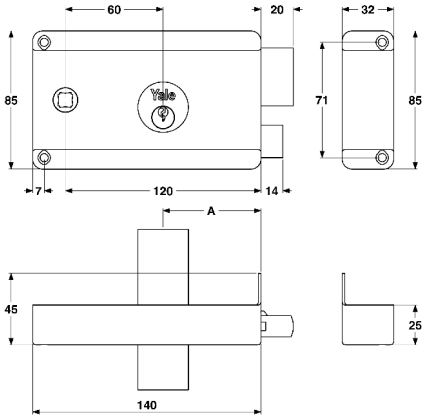

CODE	A	CYLINDER
63060601	60mm dx	2250045
63060602	60mm sx	2250045

SKU	DESCRIPTION	UOM	FIN	MAT	PKG	WGT
63060601	63060 series mechanical rim lock with sq. spindle follower, right hand, double throw, BS60mm, Painted Steel, Box	PC	PNT STL	BRASS	BOX	1070
63060602	63060 series mechanical rim lock with sq. spindle follower, left hand, double throw, BS60mm, Painted Steel, Box	PC	PNT STL	BRASS	BOX	1070

Mechanical rim lock

61004-63004 Dutch type rim locks

Specifications:

- Latch operated from outside by key and from inside by pull lever
- Bolt operated by key on inside and outside
- Pull lever ready for dogging function

Features:

- Double cylinder lock for right and left handed doors
- Backsets 50 and 60mm
- Striker included
- Painted steel finish
- Pair of inside/outside cylinders included
- Cylinder 2200031002 for 610 code
- Cylinder 2200042 for 630 code
- 3 keys

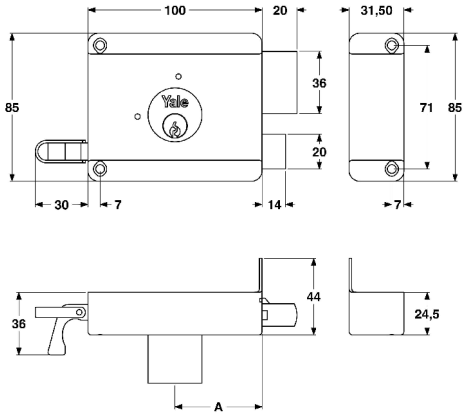

CODE	A	CYLINDER
61004501	50mm dx	2200031002
61004601	60mm dx	2200031002
61004502	50mm sx	2200031002
61004602	60mm sx	2200031002
63004501	50mm dx	2200042
63004601	60mm dx	2200042
63004502	50mm sx	2200042
63004602	60mm sx	2200042

SKU	DESCRIPTION	UOM	FIN	MAT	PKG	WGT
61004501	61004 series mechanical dutch rim lock, right hand, double throw, BS50mm, Painted Steel, Box, With Cylinder 2200031	PC	PNT STL	BRASS	BOX	900
61004502	61004 series mechanical dutch rim lock, left hand, double throw, BS50mm, Painted Steel, Box With Cylinder 2200031	PC	PNT STL	BRASS	BOX	900
61004601	61004 series mechanical dutch rim lock, right hand, double throw, BS60mm, Painted Steel, Box With Cylinder 2200031	PC	PNT STL	BRASS	BOX	980
61004602	61004 series mechanical dutch rim lock, left hand, double throw, BS60mm, Painted Steel, Box With Cylinder 2200031	PC	PNT STL	BRASS	BOX	980

Mechanical rim lock

61004-63004 Dutch type rim locks

SKU	DESCRIPTION	UOM	FIN	MAT	PKG	WGT
63004501	63004 series mechanical dutch rim lock, right hand, double throw, BS50mm, Painted Steel, Box With cylinder 2200042	PC	PNT STL	BRASS	BOX	910
63004502	63004 series mechanical dutch rim lock, left hand, double throw, BS50mm, Painted Steel, Box With cylinder 2200042	PC	PNT STL	BRASS	BOX	910
63004601	63004 series mechanical dutch rim lock, right hand, double throw, BS60mm, Painted Steel, Box With cylinder 2200042	PC	PNT STL	BRASS	BOX	980
63004602	63004 series mechanical dutch rim lock, left hand, double throw, BS60mm, Painted Steel, Box With cylinder 2200042	PC	PNT STL	BRASS	BOX	980

Mechanical rim lock

62000 - Rim lock with knob

Specifications:
- Latch operated from outside by key and from inside by pull lever
- Bolt operated by knob from inside and by key from outside

Features:
- Lock for right and left handed doors
- Backsets 40, 50, 60 and 70mm
- Striker included
- Painted steel finish
- Outside cylinders included
- 3 keys

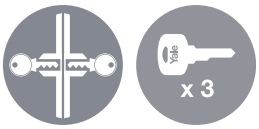

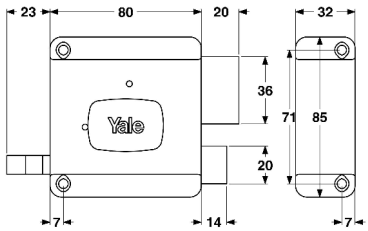

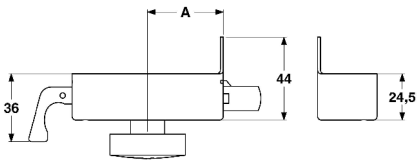

CODE	A	CYLINDER
62000401	40mm dx	2200031
62000501	50mm dx	2200031
62000601	60mm dx	2200031
62000701	70mm dx	2200031
62000402	40mm sx	2200031
62000502	50mm sx	2200031
62000602	60mm sx	2200031
62000702	70mm sx	2200031

Mechanical rim lock

62000 - Rim lock with knob

SKU	DESCRIPTION	UOM	FIN	MAT	PKG	WGT
62000401	62000 series mechanical rim lock with knob, right hand, double throw, BS40mm, Painted Steel, Box	PC	PNT STL	BRASS	BOX	820
62000402	62000 series mechanical rim lock with knob, left hand, double throw, BS40mm, Painted Steel, Box	PC	PNT STL	BRASS	BOX	820
62000501	62000 series mechanical rim lock with knob, right hand, double throw, BS50mm, Painted Steel, Box	PC	PNT STL	BRASS	BOX	890
62000502	62000 series mechanical rim lock with knob, left hand, double throw, BS50mm, Painted Steel, Box	PC	PNT STL	BRASS	BOX	890
62000601	62000 series mechanical rim lock with knob, right hand, double throw, BS60mm, Painted Steel, Box	PC	PNT STL	BRASS	BOX	960
62000602	62000 series mechanical rim lock with knob, left hand, double throw, BS60mm, Painted Steel, Box	PC	PNT STL	BRASS	BOX	960
62000701	62000 series mechanical rim lock with knob, right hand, double throw, BS70mm, Painted Steel, Box	PC	PNT STL	BRASS	BOX	1001
62000702	62000 series mechanical rim lock with knob, left hand, double throw, BS70mm, Painted Steel, Box	PC	PNT STL	BRASS	BOX	1001

Robin lever locksets

2 Lever lockset

Specifications:

- 2 lever lock and handle set
- Lock case depth 64mm (2.5”) or 76mm (3”)
- Centre distance 57mm
- Lock includes 2 keys
- Easy reversible latch for left or right hand doors
- ”Robin” design aluminium handle set with spring mechanism
- Handle plate 154(l) x 40(w) x 10(d) mm

Features:

- Anodized Silver or Gold Finish
- Reversible for left or right hand doors

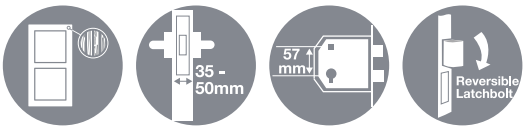

SKU	DESCRIPTION	UOM	FIN	MAT	PKG
22-A100-R246-76-1111	Robin handle 2 lever lockset, 76mm (3”) case, 2 keys, Handle plate 154(l) x 40(w) x 10(d) mm, CN57mm	SET	ANODIZED SILVER	ALUMINIUM	BOX
22-A100-R246-76-0211	Robin handle 2 lever lockset, 76mm (3”) case, 2 keys, Handle plate 154(l) x 40(w) x 10(d) mm, CN57mm	SET	ANODIZED GOLD	ALUMINIUM	BOX
22-A100-R246-76-1101	Robin handle 2 lever lockset, 76mm (3”) case, 2 keys, Handle plate 154(l) x 40(w) x 10(d) mm, CN57mm	SET	ANODIZED SILVER	ALUMINIUM	BLISTER
22-A100-R246-76-0201	Robin handle 2 lever lockset, 76mm (3”) case, 2 keys, Handle plate 154(l) x 40(w) x 10(d) mm, CN57mm	SET	ANODIZED GOLD	ALUMINIUM	BLISTER
22-A100-R246-64-1101	Robin handle 2 lever lockset, 64mm (2.5”) Case, 2 keys, Handle plate 154(l) x 40(w) x 10(d) mm, CN57mm	SET	ANODIZED SILVER	ALUMINIUM	BLISTER
22-A100-R246-64-0201	Robin handle 2 lever lockset, 64mm (2.5”) Case, 2 keys, Handle plate 154(l) x 40(w) x 10(d) mm, CN57mm	SET	ANODIZED GOLD	ALUMINIUM	BLISTER

Robin lever locksets
Bathroom lockset

Specifications:
- Bathroom / privacy lock and handle set
- Lock case depth 64mm (2.5”) or 76mm (3”)
- Centre distance 57mm
- Easy reversible latch for left or right hand doors
- ”Robin” design aluminium handle set with turn and indicator
- Handle plate 154(l) x 40(w) x 10(d) mm

Features:
- Anodized Silver or Gold Finish
- Reversible for left or right hand doors

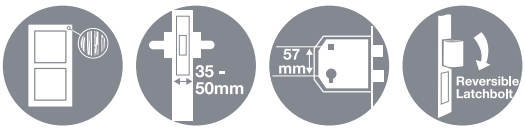

SKU	DESCRIPTION	UOM	FIN	MAT	PKG
22-A100-R236-76-1111	Robin handle, bathroom lockset, 76mm (3”) case, Handle plate 154(l) x 40(w) x 10(d) mm, CN57mm	SET	ANODIZED SILVER	ALUMINIUM	BOX
22-A100-R236-76-0211	Robin handle, bathroom lockset, 76mm (3”) case, Handle plate 154(l) x 40(w) x 10(d) mm, CN57mm	SET	ANODIZED GOLD	ALUMINIUM	BOX
22-A100-R236-76-1101	Robin handle, bathroom lockset, 76mm (3”) case, Handle plate 154(l) x 40(w) x 10(d) mm, CN57mm	SET	ANODIZED SILVER	ALUMINIUM	BLISTER
22-A100-R236-76-0201	Robin handle, bathroom lockset, 76mm (3”) case, Handle plate 154(l) x 40(w) x 10(d) mm, CN57mm	SET	ANODIZED GOLD	ALUMINIUM	BLISTER
22-A100-R236-64-1101	Robin handle, bathroom lockset, 64mm (2.5”) Case, Handle plate 154(l) x 40(w) x 10(d) mm, CN57mm	SET	ANODIZED SILVER	ALUMINIUM	BLISTER
22-A100-R236-64-0201	Robin handle, bathroom lockset, 64mm (2.5”) Case, Handle plate 154(l) x 40(w) x 10(d) mm, CN57mm	SET	ANODIZED GOLD	ALUMINIUM	BLISTER

Push button
P-DL01 Lock

Specifications:
- Push button lock
- Keyless door lock

Features:
- Over 8000 codes
- Code can be programmed with between 4 and 6 digits
- Suitable for left and right doors

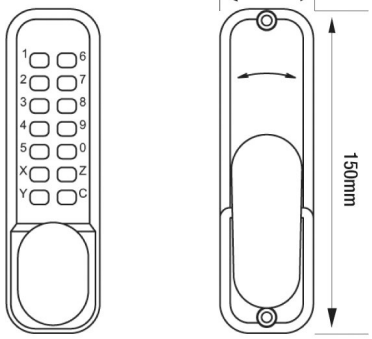

SKU	DESCRIPTION	UOM	FIN	MAT	PKG	WGT
P-DL01-PB DDL1	Push button P-DL01 Series, keyless door lock, over 8000 codes, 4-6 digits codes, left & right hand, Polish Brass, Blister	PR	POLISH GOLD	ZINC ALLOY	BLISTER	450
P-DL01-SC DDL1	Push button P-DL01 Series, keyless door lock, over 8000 codes, 4-6 digits codes, left & right hand, Satin Chrome, Blister	PR	SATING CHROME	ZINC ALLOY	BLISTER	450

Push button
P-DL02 Lock

Specifications:
- Hold open push button lock
- Keyless door lock

Features:
- Over 8000 codes
- Code can be programmed with between 4 and 6 digits
- Suitable for left and right doors
- Hold open functions

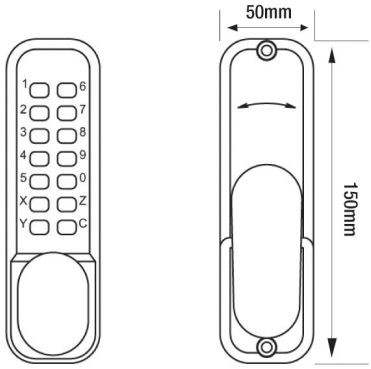

SKU	DESCRIPTION	UOM	FIN	MAT	PKG	WGT
P-DL02-PB	Hold open push button P-DL02 Series, keyless door lock, over 8000 codes, 4-6 digits codes, left & right hand, Polish Brass, Blister	PR	POLISH GOLD	ZINC ALLOY	BLISTER	450
P-DL02-SC	Hold open push button P-DL02 Series, keyless door lock, over 8000 codes, 4-6 digits codes, left & right hand, Satin Chrome, Blister	PR	SATING CHROME	ZINC ALLOY	BLISTER	450

Yale®

Nightlatches

Nightlatch

89 Deadlocking standard nightlatch

Specifications:

- Backset 60mm
- Inside handle can be deadlocked by reverse turn of key in outside cylinder after losing the door
- Snib function enables the latch to be held back
- Deadlocked by the snib button internally, making the lock inoperable by key or handle
- High security anti-bump cylinder

Features:

- Suitable for both left and right handed,
- For inward opening doors up to 57mm thick.

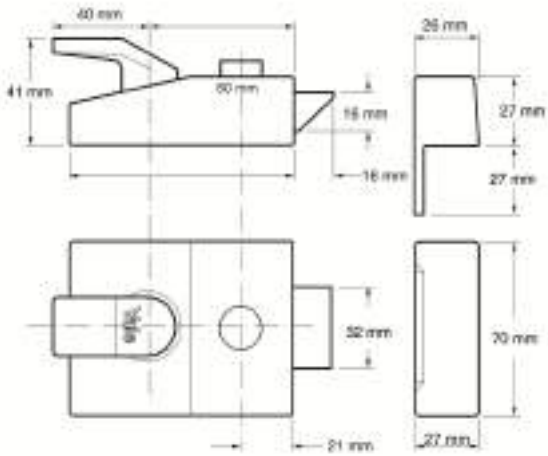

SKU	DESCRIPTION	UOM	FIN	MAT	PKG	WGT
P-89-BLX-PB-60	89 Series night latch, left and right hand, anti bump cylinder, 2 key, BS60mm, Polished brass, Blister	PC	Polished brass	BRASS	BLISTER	790
P-89-DMG-PB-60	89 Series night latch, left and right hand, anti bump cylinder, 2 key, BS60mm, Grey/Polished brass, Blister	PC	Grey/ Polished brass	BRASS	BLISTER	790
P-89-DMG-SC-60	89 Series night latch, left and right hand, anti bump cylinder, 2 key, BS60mm, Grey/Satin Chrome, Blister	PC	Grey/ Satin Chrome	BRASS	BLISTER	790
P-89-WH-PB60	89 Series night latch, left and right hand, anti bump cylinder, 2 key, BS60mm, White/Polished brass, Blister	PC	White/ Polished brass	BRASS	BLISTER	790

Nightlatch

77T Traditional nightlatch

Specifications:
- The original Yale lock
- 60mm backset
- Snib function enable the latch to be held back
- Latch can be deadlocked by the snib button internally

Features:
- Suitable for both left and right handed,
- For inward opening doors up to 57mm thick.

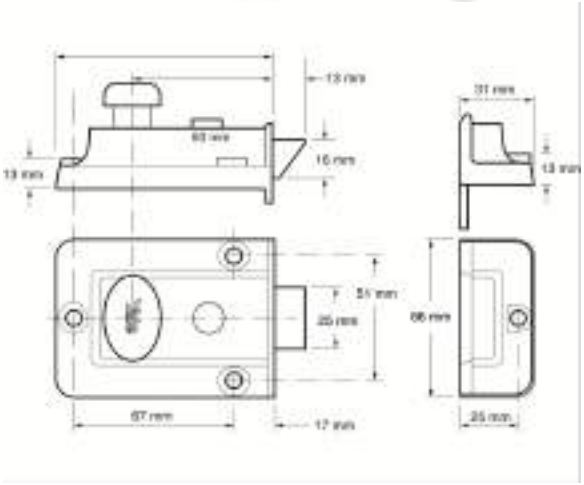

SKU	DESCRIPTION	UOM	FIN	MAT	PKG	WGT
P-77-CH-CH-60	77 Series traditional night latch, left and right hand, 3 key, max. dr. thick 57mm, BS60mm, Chrome Polish, Blister	PC	Chrome Polish	BRASS	BLISTER	790
P-77-ENB-PB-60	77 Series traditional night latch, left and right hand, 3 key, max. dr. thick 57mm, BS60mm, Nickel brass/Polished Brass, Blister	PC	Nickel brass/ Polished Brass	BRASS	BLISTER	790
P-77-ENB-SC-60	77 Series traditional night latch, left and right hand, 3 key, max. dr. thick 57mm, BS60mm, Nickel brass/Satin chrome, Blister	PC	Nickel brass/ Satin chrome	BRASS	BLISTER	790
P-77-BLX-PB-60	77 Series traditional night latch, left and right hand, 3 key, max. dr. thick 57mm, BS60mm, Polished Brass, Blister	PC	Polished Brass	BRASS	BLISTER	790

Nightlatch
Y2D Rim dead bolt

Specifications:
- Lock case body of die cast zinc alloy
- Backset 60mm
- Operated by turn knob from inside and by key from outside
- Brass cylinder and flat dimple keys (4pcs)

Features:
- Suitable for left and right hand opening doors
- Suitable for door thickness: 35mm - 70mm

SKU	DESCRIPTION	UOM	FIN	MAT	PKG	WGT
Y2DAB	Y2D rim deadlock, Key + Knob, 4 dimple key, dr. thick 35-70mm, BS60mm, Antique Brass, Blister	PC	ANTIQUE BRASS	ZINC ALLOY	BLISTER	640
Y2DDL	Y2D rim deadlock, Key + Knob, 4 dimple key, dr. thick 35-70mm, BS60mm, Polished Chrom, Blister	PC	POLISHED CHROME	ZINC ALLOY	BLISTER	640
Y2DGN	Y2D rim deadlock, Key + Knob, 4 dimple key, dr. thick 35-70mm, BS60mm, Brown, Blister	PC	BROWN	ZINC ALLOY	BLISTER	640
Y2DGS	Y2D rim deadlock, Key + Knob, 4 dimple key, dr. thick 35-70mm, BS60mm, Matt black, Blister	PC	BLACK	ZINC ALLOY	BLISTER	640
Y2DPB	Y2D rim deadlock, Key + Knob, 4 dimple key, dr. thick 35-70mm, BS60mm, Polished Brass, Blister	PC	POLISHED BRASS	ZINC ALLOY	BLISTER	640
Y2DSN	Y2D rim deadlock, Key + Knob, 4 dimple key, dr. thick 35-70mm, BS60mm, Satin nickel, Blister	PC	SATIN NICKEL	ZINC ALLOY	BLISTER	640
Y2DWH	Y2D rim deadlock, Key + Knob, 4 dimple key, dr. thick 35-70mm, BS60mm, White, Blister	PC	WHITE	ZINC ALLOY	BLISTER	640

Nightlatch

Y3 Contemporary nightlatch

Specifications:
- 60mm backset
- Snib function enables the latch to be held back
- Latch can be deadlocked by the snib button internally

Features:
- Contemporary design
- Retro-fit replacement for 77T Traditional Nightlatch - No additional chiselling required
- Suitable for both left and right handed
- For inward opening doors up to 57mm thick.

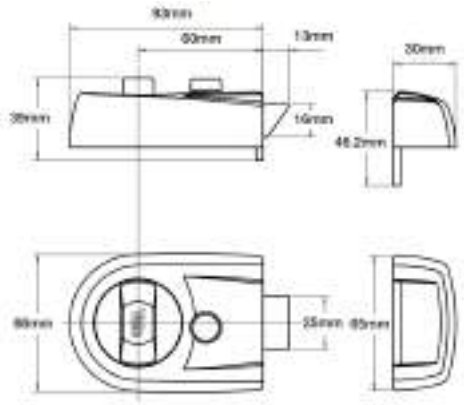

SKU	DESCRIPTION	UOM	FIN	MAT	PKG	WGT
P-Y3-BLX-PB-60	Y3 Contemporary nightlatch series, Max dr. thick 57mm, left and right hand, BS60mm, Polish Brass, Blister	PC	POLISH BRASS	ZINC ALLOY	BLISTER	
P-Y3-CH-CH-60	Y3 Contemporary nightlatch series, Max dr. thick 57mm, left and right hand, BS60mm, Polish Chrome, Blister	PC	POLISH CHROME	ZINC ALLOY	BLISTER	

Electric Rim Locks

Yale
Yale

Electric rim lock

670 - Electric rim lock

Specifications:

- Latch operated from outside and inside by key and remotely by low voltage pulse (10W-12V)

Features:

- Lock for right and left handed doors
- Backset 40, 50 and 60mm
- Painted steel finish
- Striker included
- Pair of inside/outside cylinders included
- External loose cylinder 2200231
- 3 keys

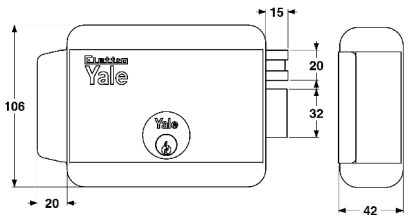

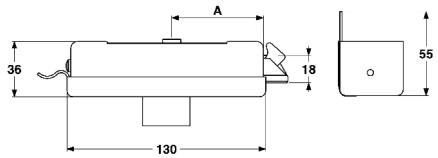

CODE	A	CYLINDER
67000401	40mm cx	2202231
67000501	50mm cx	2202231
67000601	60mm cx	2202231
67000402	40mm sx	2202231
67000502	50mm sx	2202231
67000602	60mm sx	2202231

SKU	DESCRIPTION	UOM	FIN	MAT	PKG	WGT
67000401	670 series electric rim lock, Right hand double cylinder lock, Key + Key, BS40mm, Painted Steel, Box	PC	PNT STL	BRASS	BOX	1650
67000402	670 series electric rim lock, left hand double cylinder lock, Key + Key, BS40mm, Painted Steel, Box	PC	PNT STL	BRASS	BOX	1650
67000501	670 series electric rim lock, Right hand double cylinder lock, Key + Key, BS50mm, Painted Steel, Box	PC	PNT STL	BRASS	BOX	1650
67000502	670 series electric rim lock, left hand double cylinder lock, Key + Key, BS50mm, Painted Steel, Box	PC	PNT STL	BRASS	BOX	1650
67000601	670 series electric rim lock, Right hand double cylinder lock, Key + Key, BS60mm, Painted Steel, Box	PC	PNT STL	BRASS	BOX	1650
67000602	670 series electric rim lock, left hand double cylinder lock, Key + Key, BS60mm, Painted Steel, Box	PC	PNT STL	BRASS	BOX	1650

Electric rim lock

674 - Electric rim lock

Specifications:

- Latch operated from outside by key and from inside by button and remotely by low voltage pulse (10W-12V)

Features:

- Lock for right and left handed doors
- Backset 40, 50, 60 and 70mm
- Painted steel finish
- Striker included
- Outside cylinders included
- External loose cylinder 2200231
- 3 keys

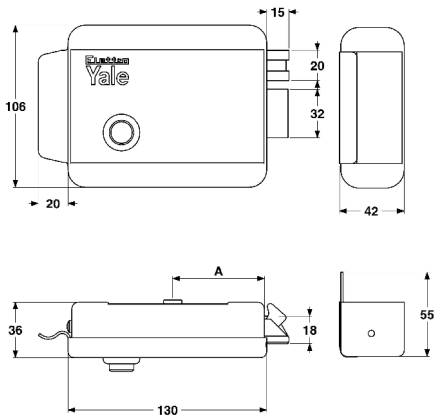

CODE	A	CYLINDER
67400401	40mm cx	2202031
67400601	60mm cx	2202031
67400701	70mm cx	2202031
67400402	40mm sx	2202031
67400502	50mm sx	2202031
67400602	60mm sx	2202031
67400702	70mm sx	2202031

SKU	DESCRIPTION	UOM	FIN	MAT	PKG	WGT
67400401	674 series electric rim lock, Right hand double cylinder lock, Key+ Button, BS40mm, Painted Steel, Box	PC	PNT STL	BRASS	BOX	1590
67400402	674 series electric rim lock, Left hand double cylinder lock, Key+ Button, BS40mm, Painted Steel, Box	PC	PNT STL	BRASS	BOX	1590
67400501	674 series electric rim lock, Right hand double cylinder lock, Key+ Button, BS50mm, Painted Steel, Box	PC	PNT STL	BRASS	BOX	1590
67400502	674 series electric rim lock, Left hand double cylinder lock, Key+ Button, BS50mm, Painted Steel, Box	PC	PNT STL	BRASS	BOX	1590
67400601	674 series electric rim lock, Right hand double cylinder lock, Key+ Button, BS60mm, Painted Steel, Box	PC	PNT STL	BRASS	BOX	1590
67400602	674 series electric rim lock, Left hand double cylinder lock, Key+ Button, BS60mm, Painted Steel, Box	PC	PNT STL	BRASS	BOX	1590
67400701	674 series electric rim lock, Right hand double cylinder lock, Key+ Button, BS70mm, Painted Steel, Box	PC	PNT STL	BRASS	BOX	1590
67400702	674 series electric rim lock, Left hand double cylinder lock, Key+ Button, BS70mm, Painted Steel, Box	PC	PNT STL	BRASS	BOX	1590

Electric rim lock

678 Electric rim lock

Specifications:

- Latch operated from outside by key and from inside by button (can be locked with key) and remotely by low voltage pulse (10W-12V)

Features:

- Lock for right and left handed doors
- Backset 40, 50 and 60mm
- Painted steel finish
- Striker included
- Striker included
- Pair of inside/outside cylinder included
- External loose cylinder 2200231
- 3 keys

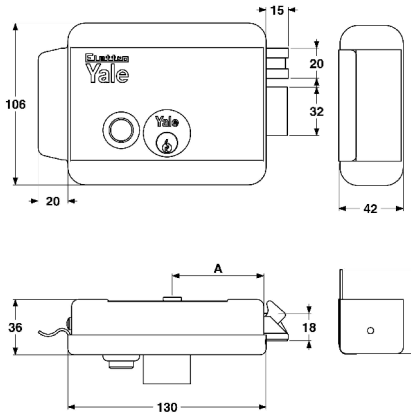

CODE	A	CYLINDER
67800401	40mm dx	2200031
67800501	50mm dx	2200031
67800601	60mm dx	2200031
67800402	40mm sx	2200031
67800502	50mm sx	2200031
67800602	60mm sx	2200031

SKU	DESCRIPTION	UOM	FIN	MAT	PKG	WGT
67800401	678 series electric rim lock, Right hand double cylinder lock, Key+ Button, BS40mm, Painted Steel, Box	PC	PNT STL	BRASS	BOX	1660
67800402	678 series electric rim lock, Left hand double cylinder lock, Key+ Button, BS40mm, Painted Steel, Box	PC	PNT STL	BRASS	BOX	1660
67800501	678 series electric rim lock, Right hand double cylinder lock, Key+ Button, BS50mm, Painted Steel, Box	PC	PNT STL	BRASS	BOX	1660
67800502	678 series electric rim lock, Left hand double cylinder lock, Key+ Button, BS50mm, Painted Steel, Box	PC	PNT STL	BRASS	BOX	1660
67800601	678 series electric rim lock, Right hand double cylinder lock, Key+ Button, BS60mm, Painted Steel, Box	PC	PNT STL	BRASS	BOX	1660
67800602	678 series electric rim lock, Left hand double cylinder lock, Key+ Button, BS60mm, Painted Steel, Box	PC	PNT STL	BRASS	BOX	1660

Electric rim lock

67890 Electric rim locks with reversed latch for external doors

Specifications:

- Latch operated from outside by key and from inside by button (can be locked with key) and remotely by low voltage pulse (10W-12V)

Features:

- Lock for right and left handed outward-opening doors
- Backset 60mm
- Painted steel finish
- Striker included
- Pair of inside/outside cylinders included, 3 keys

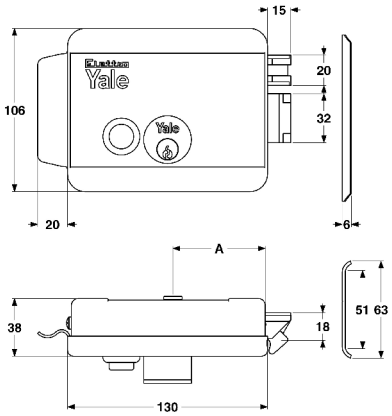

CODE	A	CYLINDER
67890601	60mm dx	2200031
67890602	60mm sx	2200031

SKU	DESCRIPTION	UOM	FIN	MAT	PKG	WGT
67890601	678 series electric rim lock with reversed latch for external doors, Right hand double cylinder lock, Key+ Button, BS60mm, Painted Steel, Box	PC	PNT STL	BRASS	BOX	1660
67890602	678 series electric rim lock with reversed latch for external doors, Left hand double cylinder lock, Key+ Button, BS60mm, Painted Steel, Box	PC	PNT STL	BRASS	BOX	1660

Electric rim locks

68000 Electric rim locks for gates

Specifications:

- Latch operated from outside and inside by key and remotely by low voltage pulse (10W-12V)
- Lock for right and left handed gates

Features:

- Backset 40 - 50 - 60 - 70 and 80mm
- Painted steel finish
- Striker included
- Outside cylinder included, 3 keys
- Cover plate included
- Painted or zinc plated steel

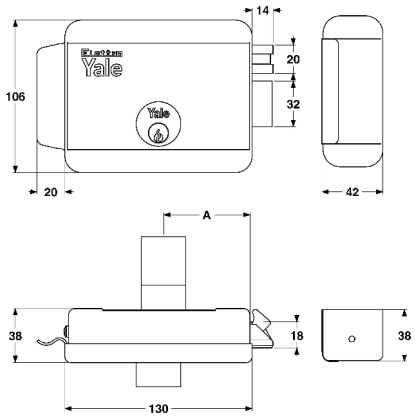

CODE	A	CYLINDER	CODE	A	CYLINDER
68000401	40mm dx	2250045	68000802	80mm sx	2250045
68000501	50mm dx	2250045	6800050105	50mm dx	2250045
68000601	60mm dx	2250045	6800060105	60mm dx	2250045
68000701	70mm dx	2250045	6800070105	70mm dx	2250045
68000801	80mm dx	2250045	6800080105	80mrn dx	2250045
68000402	40mm sx	2250045	6800050205	50mm sx	2250045
68000502	50mm sx	2250045	6800060205	60mm sx	2250045
68000602	60mm sx	2250045	6800070205	70mm sx	2250045
68000702	70mm sx	2250045	6800080205	80mm sx	2250045

SKU	DESCRIPTION	UOM	FIN	MAT	PKG	WGT
68000401	68000 series electric rim lock for gates, right hand double cylinder lock, Key+ Key, BS40mm, Painted steel, Box	PC	PNT STL	BRASS	BOX	2200
68000402	68000 series electric rim lock for gates, left hand double cylinder lock, Key+ Key, BS40mm, Painted steel, Box	PC	PNT STL	BRASS	BOX	2200
68000501	68000 series electric rim lock for gates, right hand double cylinder lock, Key+ Key, BS50mm, Painted steel, Box	PC	PNT STL	BRASS	BOX	2200
68000502	68000 series electric rim lock for gates, left hand double cylinder lock, Key+ Key, BS50mm, Painted steel, Box	PC	PNT STL	BRASS	BOX	2200
6800050105	68000 series electric rim lock for gates, right hand double cylinder lock, Key+ Key, BS50mm, Zinc-plated steel, Box	PC	ZNC PNT STL	BRASS	BOX	2200
6800050205	68000 series electric rim lock for gates, left hand double cylinder lock, Key+ Key, BS50mm, Zinc-plated steel, Box	PC	ZNC PNT STL	BRASS	BOX	2200
68000601	68000 series electric rim lock for gates, right hand double cylinder lock, Key+ Key, BS60mm, Painted steel, Box	PC	PNT STL	BRASS	BOX	2200
68000602	68000 series electric rim lock for gates, left hand double cylinder lock, Key+ Key, BS60mm, Painted steel, Box	PC	PNT STL	BRASS	BOX	2200
6800060105	68000 series electric rim lock for gates, right hand double cylinder lock, Key+ Key, BS60mm, Zinc-plated steel, Box	PC	ZNC PNT STL	BRASS	BOX	2200

Electric rim locks

68000 Electric rim locks for gates

SKU	DESCRIPTION	UOM	FIN	MAT	PKG	WGT
6800060205	68000 series electric rim lock for gates, left hand double cylinder lock, Key+ Key, BS60mm, Zinc-plated steel, Box	PC	ZNC PNT STL	BRASS	BOX	2200
68000701	68000 series electric rim lock for gates, right hand double cylinder lock, Key+ Key, BS70mm, Painted steel, Box	PC	PNT STL	BRASS	BOX	2200
68000702	68000 series electric rim lock for gates, left hand double cylinder lock, Key+ Key, BS70mm, Painted steel, Box	PC	PNT STL	BRASS	BOX	2200
6800070105	68000 series electric rim lock for gates, right hand double cylinder lock, Key+ Key, BS70mm, Zinc-plated steel, Box	PC	ZNC PNT STL	BRASS	BOX	2200
6800070205	68000 series electric rim lock for gates, left hand double cylinder lock, Key+ Key, BS70mm, Zinc-plated steel, Box	PC	ZNC PNT STL	BRASS	BOX	2200
68000801	68000 series electric rim lock for gates, right hand double cylinder lock, Key+ Key, BS80mm, Painted steel, Box	PC	PNT STL	BRASS	BOX	2200
68000802	68000 series electric rim lock for gates, left hand double cylinder lock, Key+ Key, BS80mm, Painted steel, Box	PC	PNT STL	BRASS	BOX	2200
6800080105	68000 series electric rim lock for gates, right hand double cylinder lock, Key+ Key, BS80mm, Zinc-plated steel, Box	PC	ZNC PNT STL	BRASS	BOX	2200
6800080205	68000 series electric rim lock for gates, left hand double cylinder lock, Key+ Key, BS80mm, Zinc-plated steel, Box	PC	ZNC PNT STL	BRASS	BOX	2200

Electric rim locks

68400 Electric rim locks for gates

Specifications:

- Latch operated from outside by key and from inside by button and remotely by low voltage pulse (10W-12V)
- Lock for right and left handed gates

Features:

- Backset 40 - 50 - 60 - 70 and 80mm
- Painted steel finish
- Striker included
- Outside cylinder included 2250045, 3 keys
- Cover plate included

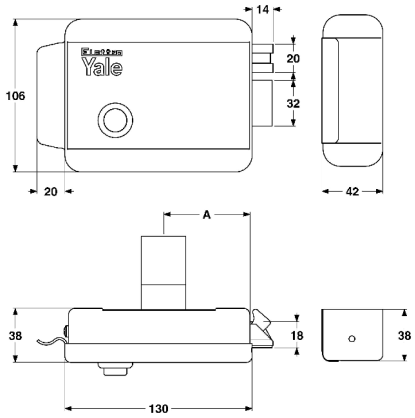

CODE	A	CYLINDER
68400401	40mm dx	2250045
68400501	50mm dx	2250045
68400601	60mm dx	2250045
68400701	70mm dx	2250045
68400801	80mm dx	2250045
68400402	40mm sx	2250045
68400502	50mm sx	2250045
68400602	60mm sx	2250045
68400702	70mm sx	2250045
68400802	80mm sx	2250045

SKU	DESCRIPTION	UOM	FIN	MAT	PKG	WGT
68400401	6800400 series electric rim lock for gates, right hand double cylinder lock, Button + Key, BS40mm, Painted steel, Box	PC	PNT STL	BRASS	BOX	2170
68400402	6800400 series electric rim lock for gates, left hand double cylinder lock, Button + Key, BS40mm, Painted steel, Box	PC	PNT STL	BRASS	BOX	2170
68400501	6800400 series electric rim lock for gates, right hand double cylinder lock, Button + Key, BS50mm, Painted steel, Box	PC	PNT STL	BRASS	BOX	2170
68400502	6800400 series electric rim lock for gates, left hand double cylinder lock, Button + Key, BS50mm, Painted steel, Box	PC	PNT STL	BRASS	BOX	2170
68400601	6800400 series electric rim lock for gates, right hand double cylinder lock, Button + Key, BS60mm, Painted steel, Box	PC	PNT STL	BRASS	BOX	2170
68400602	6800400 series electric rim lock for gates, left hand double cylinder lock, Button + Key, BS60mm, Painted steel, Box	PC	PNT STL	BRASS	BOX	2170
68400701	6800400 series electric rim lock for gates, right hand double cylinder lock, Button + Key, BS70mm, Painted steel, Box	PC	PNT STL	BRASS	BOX	2170

Electric rim locks

68400 Electric rim locks for gates

SKU	DESCRIPTION	UOM	FIN	MAT	PKG	WGT
68400702	6800400 series electric rim lock for gates, left hand double cylinder lock, Button + Key, BS70mm, Painted steel, Box	PC	PNT STL	BRASS	BOX	2170
68400801	6800400 series electric rim lock for gates, right hand double cylinder lock, Button + Key, BS80mm, Painted steel, Box	PC	PNT STL	BRASS	BOX	2170
68400802	6800400 series electric rim lock for gates, left hand double cylinder lock, Button + Key, BS80mm, Painted steel, Box	PC	PNT STL	BRASS	BOX	2170

Electric rim locks

68800 Electric rim locks for gates

Specifications:

- Latch operated from outside by key and from inside by button (can be locked with key) and remotely by low voltage pulse (10W-12V)
- Lock for right and left handed gates

Features:

- Backset 50 - 60 - 70 and 80mm
- Painted or galvanized steel finish (suffix 05)
- Striker included
- Pair of inside/outside cylinder included 2250045, 3 keys
- Cover plate included

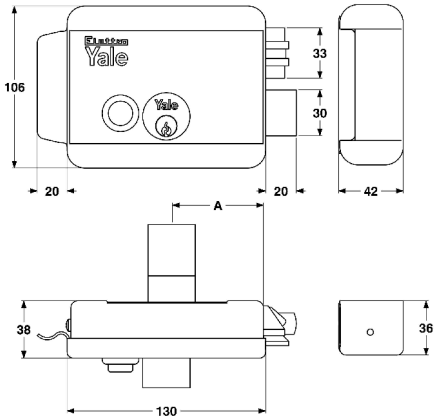

CODE	A	CYLINDER
68880501	50mm dx	2250045
68880601	60mm dx	2250045
68880701	70mm dx	2250045
68880502	50mm sx	2250045
68880602	60mm sx	2250045
68880702	70mm sx	2250045
6888060105	60mm dx	2250045
6888070105	70mm dx	2250045
6888060205	60mm sx	2250045
6888070205	70mm sx	2250045

SKU	DESCRIPTION	UOM	FIN	MAT	PKG	WGT
68800501	68800 Series Electric rim locks for gates, right hand double cylinder lock, Button + Key + Key, BS50mm, Painted steel, Box	PC	PNT STL	BRASS	BOX	2170
68800502	68800 Series Electric rim locks for gates, left hand double cylinder lock, Button + Key + Key, BS50mm, Painted steel, Box	PC	PNT STL	BRASS	BOX	2170
6880050105	68800 Series Electric rim locks for gates, right hand double cylinder lock, Button + Key + Key, BS50mm, Galvanised Steel, Box	PC	GALV STL	BRASS	BOX	2170
6880050205	68800 Series Electric rim locks for gates, left hand double cylinder lock, Button + Key + Key, BS50mm, Galvanised Steel, Box	PC	GALV STL	BRASS	BOX	2170
68800601	68800 Series Electric rim locks for gates, right hand double cylinder lock, Button + Key + Key, BS60mm, Painted steel, Box	PC	PNT STL	BRASS	BOX	2170
68800602	68800 Series Electric rim locks for gates, left hand double cylinder lock, Button + Key + Key, BS60mm, Painted steel, Box	PC	PNT STL	BRASS	BOX	2170
6880060105	68800 Series Electric rim locks for gates, right hand double cylinder lock, Button + Key + Key, BS60mm, Galvanised Steel, Box	PC	GALV STL	BRASS	BOX	2170

Electric rim locks

68800 Electric rim locks for gates

SKU	DESCRIPTION	UOM	FIN	MAT	PKG	WGT
6880060205	68800 Series Electric rim locks for gates, left hand double cylinder lock, Button + Key + Key, BS60mm, Galvanised Steel, Box	PC	GALV STL	BRASS	BOX	2170
68800701	68800 Series Electric rim locks for gates, right hand double cylinder lock, Button + Key + Key, BS70mm, Painted steel, Box	PC	PNT STL	BRASS	BOX	2170
68800702	68800 Series Electric rim locks for gates, left hand double cylinder lock, Button + Key + Key, BS70mm, Painted steel, Box	PC	PNT STL	BRASS	BOX	2170
6880070105	68800 Series Electric rim locks for gates, right hand double cylinder lock, Button + Key + Key, BS70mm, Galvanised Steel, Box	PC	GALV STL	BRASS	BOX	2170
6880070205	68800 Series Electric rim locks for gates, left hand double cylinder lock, Button + Key + Key, BS70mm, Galvanised Steel, Box	PC	GALV STL	BRASS	BOX	2170
68800801	68800 Series Electric rim locks for gates, right hand double cylinder lock, Button + Key + Key, BS80mm, Painted steel, Box	PC	PNT STL	BRASS	BOX	2170
68800802	68800 Series Electric rim locks for gates, left hand double cylinder lock, Button + Key + Key, BS80mm, Painted steel, Box	PC	PNT STL	BRASS	BOX	2170
6880080105	68800 Series Electric rim locks for gates, right hand double cylinder lock, Button + Key + Key, BS80mm, Galvanised Steel, Box	PC	GALV STL	BRASS	BOX	2170
6880080205	68800 Series Electric rim locks for gates, left hand double cylinder lock, Button + Key + Key, BS80mm, Galvanised Steel, Box	PC	GALV STL	BRASS	BOX	2170

Electric rim locks

68080 Electric rim locks with turns for gates

Specifications:

- Latch operated from outside and inside by key and remotely by low voltage pulse (10W-12V)
- Mechanical bolt operated by key from inside and outside

Features:

- Lock for right and left handed gates
- Backset 50, 60 and 70mm
- Painted or galvanized steel finish
- Striker included
- Pair of inside/outside cylinders included, 3 keys
- Cover plate included

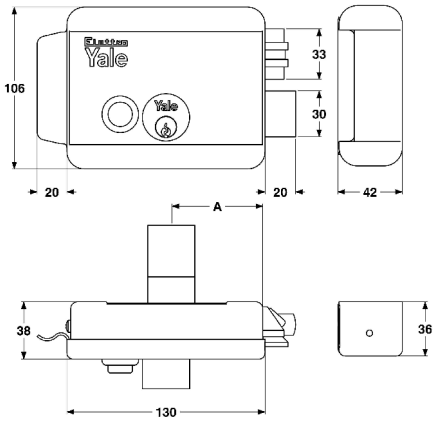

CODE	A	CYLINDER	CODE	A	CYLINDER
66000501	50mm dx	2250045	6880050205	50mm dx	2250045
68000601	60mm dx	2250045	6880060205	60mm dx	2250045
66800701	70mm dx	2250045	6800070205	70mm dx	2250045
68800801	80mm dx	2250045	6880080205	80mm dx	2250045
6880050105	50mm sx	2250045	68800502	50mm sx	2250045
6880060105	60mm sx	2250045	68800602	60mm sx	2250045
6880070105	70mm sx	2250045	68800702	70mm sx	2250045
6880080105	80mm sx	2250045	68800802	80mm sx	2250045

SKU	DESCRIPTION	UOM	FIN	MAT	PKG	WGT
68080501	68080 Series Electric Rim Locks with turns for Gates, right hand double cylinder lock, Key + Key, BS50mm, Painted steel, Box	PC	PNT STL	BRASS	BOX	2400
68080502	68080 Series Electric Rim Locks with turns for Gates, left hand double cylinder lock, Key + Key, BS50mm, Painted steel, Box	PC	PNT STL	BRASS	BOX	2400
6808050105	68080 Series Electric Rim Locks with turns for Gates, right hand double cylinder lock, Key + Key, BS50mm, Zinc-plated Steel, Box	PC	ZNC PNT STL	BRASS	BOX	2400
6808050205	68080 Series Electric Rim Locks with turns for Gates, left hand double cylinder lock, Key + Key, BS50mm, Zinc-plated Steel, Box	PC	ZNC PNT STL	BRASS	BOX	2400
68080601	68080 Series Electric Rim Locks with turns for Gates, right hand double cylinder lock, Key + Key, BS60mm, Painted steel, Box	PC	PNT STL	BRASS	BOX	2400
68080602	68080 Series Electric Rim Locks with turns for Gates, left hand double cylinder lock, Key + Key, BS60mm, Painted steel, Box	PC	PNT STL	BRASS	BOX	2400
6808060105	68080 Series Electric Rim Locks with turns for Gates, right hand double cylinder lock, Key + Key, BS60mm, Zinc-plated Steel, Box	PC	ZNC PNT STL	BRASS	BOX	2400

Electric rim locks

68080 Electric rim locks with turns for gates

SKU	DESCRIPTION	UOM	FIN	MAT	PKG	WGT
6808060205	68080 Series Electric Rim Locks with turns for Gates, left hand double cylinder lock, Key + Key, BS60mm, Zinc-plated Steel, Box	PC	ZNC PNT STL	BRASS	BOX	2400
68080701	68080 Series Electric Rim Locks with turns for Gates, right hand double cylinder lock, Key + Key, BS70mm, Painted steel, Box	PC	PNT STL	BRASS	BOX	2400
68080702	68080 Series Electric Rim Locks with turns for Gates, left hand double cylinder lock, Key + Key, BS70mm, Painted steel, Box	PC	PNT STL	BRASS	BOX	2400
6808070105	68080 Series Electric Rim Locks with turns for Gates, right hand double cylinder lock, Key + Key, BS70mm, Zinc-plated Steel, Box	PC	ZNC PNT STL	BRASS	BOX	2400
6808070205	68080 Series Electric Rim Locks with turns for Gates, left hand double cylinder lock, Key + Key, BS70mm, Zinc-plated Steel, Box	PC	ZNC PNT STL	BRASS	BOX	2400

Electric rim locks

68880 Electric rim locks with turns for gates

Specifications:

- Latch operated from outside by key and from inside by button (can be locked with key) and remotely by low voltage pulse (10W-12V)
- Mechanical bolt operated by key from inside and outside

Features:

- Lock for right and left handed gates;backset 50, 60 and 70mm
- Painted or galvanized steel finish
- Striker included
- Pair of inside/outside cylinders included, 3 keys

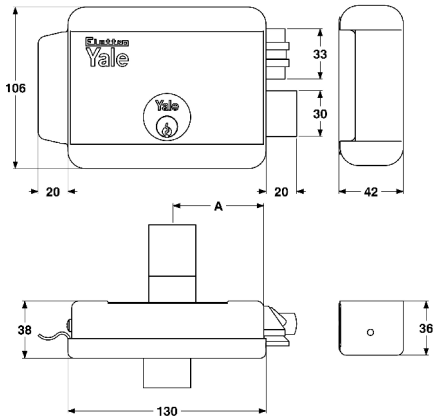

CODE	A	CYLINDER
68080501	50mm dx	2250045
68080601	60mm dx	2250045
68080701	70mm dx	2250045
68080502	50mm sx	2250045
68080602	60mm sx	2250045
68080702	70mm sx	2250045
6808050105	50mm dx	2250045
6808060105	60mm dx	2250045
6808070105	70mm dx	2250045
6808050205	50mm sx	2250045
6808060205	60mm sx	2250045
6808070205	70mm sx	2250045

SKU	DESCRIPTION	UOM	FIN	MAT	PKG	WGT
68880501	68880 Series Electric Rim Locks with turns for Gates, right hand double cylinder lock, Key + Key + Button, BS50mm, Painted steel, Box	PC	PNT STL	BRASS	BOX	2410
68880502	68880 Series Electric Rim Locks with turns for Gates, left hand double cylinder lock, Key + Key + Button, BS50mm, Painted steel, Box	PC	PNT STL	BRASS	BOX	2410
6888050105	68880 Series Electric Rim Locks with turns for Gates, right hand double cylinder lock, Key + Key + Button, BS50mm, Zinc-plated Steel, Box	PC	ZNC PNT STL	BRASS	BOX	2410
6888050205	68880 Series Electric Rim Locks with turns for Gates, left hand double cylinder lock, Key + Key + Button, BS50mm, Zinc-plated Steel, Box	PC	ZNC PNT STL	BRASS	BOX	2410
68880601	68880 Series Electric Rim Locks with turns for Gates, right hand double cylinder lock, Key + Key + Button, BS60mm, Painted steel, Box	PC	PNT STL	BRASS	BOX	2410
68880602	68880 Series Electric Rim Locks with turns for Gates, left hand double cylinder lock, Key + Key + Button, BS60mm, Painted steel, Box	PC	PNT STL	BRASS	BOX	2410
6888070205	68880 Series Electric Rim Locks with turns for Gates, left hand double cylinder lock, Key + Key + Button, BS70mm, Zinc-plated Steel, Box	PC	ZNC PNT STL	BRASS	BOX	2410

Electric rim locks

68880 Electric rim locks with turns for gates

SKU	DESCRIPTION	UOM	FIN	MAT	PKG	WGT
6888060105	68880 Series Electric Rim Locks with turns for Gates, right hand double cylinder lock, Key + Key + Button, BS60mm, Zinc-plated Steel, Box	PC	ZNC PNT STL	BRASS	BOX	2410
6888060205	68880 Series Electric Rim Locks with turns for Gates, left hand double cylinder lock, Key + Key + Button, BS60mm, Zinc-plated Steel, Box	PC	ZNC PNT STL	BRASS	BOX	2410
68880701	68880 Series Electric Rim Locks with turns for Gates, right hand double cylinder lock, Key + Key + Button, BS70mm, Painted steel, Box	PC	PNT STL	BRASS	BOX	2410
68880702	68880 Series Electric Rim Locks with turns for Gates, left hand double cylinder lock, Key + Key + Button, BS70mm, Painted steel, Box	PC	PNT STL	BRASS	BOX	2410
6888070105	68880 Series Electric Rim Locks with turns for Gates, right hand double cylinder lock, Key + Key + Button, BS70mm, Zinc-plated Steel, Box	PC	ZNC PNT STL	BRASS	BOX	2410

Electric rim locks

68090 Electric rim locks with reversed latch for gates

Specifications:
- Latch operated from outside and inside by key and remotely by low voltage pulse (10W-12V)

Features:
- Lock for right and left handed outward-opening gates
- Backset 60mm
- Painted steel finish
- Striker included
- Pair of inside/outside cylinders included, 3 keys
- Cover plate included

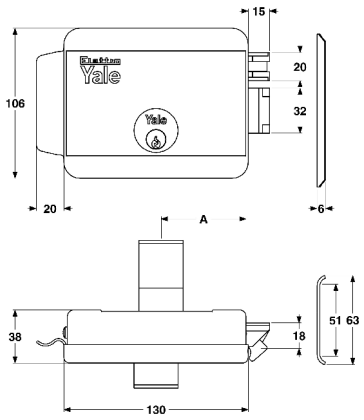

CODE	A	CYLINDER
68090601	60mm dx	2200031
68090602	60mm sx	2200031

SKU	DESCRIPTION	UOM	FIN	MAT	PKG	WGT
68090601	68090 Series Electric Rim Locks with reversed latch for Gates, right hand double cylinder lock, Key + Key, BS60mm, Painted steel, Box	PC	PNT STL	BRASS	BOX	1960
68090602	68090 Series Electric Rim Locks with reversed latch for Gates, left hand double cylinder lock, Key + Key, BS60mm, Painted steel, Box	PC	PNT STL	BRASS	BOX	1960

Yale®
Knobs and Handlesets

Cylindrical knobsets - Grade 2
Ball design

Specifications:
- Stainless steel or brass material
- Rosette 75mm wide
- Brass cylinder and keys (3 keys)
- Stainless steel latch
- Fixed latch 60mm backset and 70mm available on request
- Suitable for door 35-45mm thick
- Entrance, privacy and passage functions

Features:
- Conforms to ANSI grade 2 requirements
- Reversible for left or right hand doors
- For orders in GCC, please refer to the codes in the chart at the bottom of the chapter

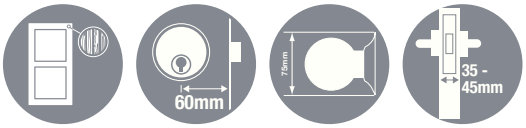

SKU	DESCRIPTION	UOM	FIN	MAT	PKG	WGT
40-CY2-5856-ET-310	Knob lock set, cylindrical, ball design, grade 2, 3 key, dr thick 35-45mm, Entrance, Satin Stainless Steel, Blister	PR	SSM	BRASS SS 304	BLISTER	460
40-CY2-5856-ET-020	Knob lock set, cylindrical, ball design, grade 2, 3 key, dr thick 35-45mm, Entrance, Polished brass, Blister	PR	PB	BRASS SS 304	BLISTER	460
40-CY2-5856-ET-090	Knob lock set, cylindrical, ball design, grade 2, 3 key, dr thick 35-45mm, Entrance, Antique brass, Blister	PR	AB	BRASS SS 304	BLISTER	460
40-CY2-5856-ET-311	Knob lock set, cylindrical, ball design, grade 2, 3 key, dr thick 35-45mm, Entrance, Stainless Steel, Box	PR	SSM	BRASS SS 304	BOX	460
40-CY2-5856-ET-021	Knob lock set, cylindrical, ball design, grade 2, 3 key, dr thick 35-45mm, Entrance, Polished brass, Box	PR	PB	BRASS SS 304	BOX	460
40-CY2-5856-ET-091	Knob lock set, cylindrical, ball design, grade 2, 3 key, dr thick 35-45mm, Entrance, Antique brass, Box	PR	AB	BRASS SS 304	BOX	460
40-CY2-5856-BK-310	Knob lock set, cylindrical, ball design, grade 2, 3 key, dr thick 35-45mm, Privacy, Satin Stainless Steel, Blister	PR	SSM	BRASS SS 304	BLISTER	460
40-CY2-5856-BK-020	Knob lock set, cylindrical, ball design, grade 2, 3 key, dr thick 35-45mm, Privacy, Polished brass, Blister	PR	PB	BRASS SS 304	BLISTER	460
40-CY2-5856-BK-090	Knob lock set, cylindrical, ball design, grade 2, 3 key, dr thick 35-45mm, Privacy, Antique brass, Blister	PR	AB	BRASS SS 304	BLISTER	460
40-CY2-5856-BK-311	Knob lock set, cylindrical, ball design, grade 2, 3 key, dr thick 35-45mm, Privacy, Stainless Steel, Box	PR	SSM	BRASS SS 304	BOX	460
40-CY2-5856-BK-021	Knob lock set, cylindrical, ball design, grade 2, 3 key, dr thick 35-45mm, Privacy, Polished brass, Box	PR	PB	BRASS SS 304	BOX	460
40-CY2-5856-BK-091	Knob lock set, cylindrical, ball design, grade 2, 3 key, dr thick 35-45mm, Privacy, Antique brass, Box	PR	AB	BRASS SS 304	BOX	460

Cylindrical knobsets - Grade 2
Ball design

SKU	DESCRIPTION	UOM	FIN	MAT	PKG	WGT
40-CY2-5856-ET-3101	Knobsets Carolina series, Entrance function, SSS finish, BS 60mm, ANSI2, Blister	PR	SSM	BRASS SS 304	BLISTER	460
40-CY2-5856-ET-3111	Knobsets Carolina series, Entrance function, SSS finish, BS 60mm, ANSI2, Box	PR	SSM	BRASS SS 304	BOX	460
40-CY2-5856-ET-0201	Knobsets Carolina series, Entrance function, PB finish, BS 60mm, ANSI2, Blister	PR	PB	BRASS SS 304	BLISTER	460
40-CY2-5856-ET-0211	Knobsets Carolina series, Entrance function, PB finish, BS 60mm, ANSI2, Box	PR	PB	BRASS SS 304	BOX	460
40-CY2-5857-ET-3101	Knobsets Carolina series, Entrance function, SSS finish, BS 70mm, ANSI2, Blister	PR	SSM	BRASS SS 304	BLISTER	460
40-CY2-5857-ET-3111	Knobsets Carolina series, Entrance function, SSS finish, BS 70mm, ANSI2, Box	PR	SSM	BRASS SS 304	BOX	460
40-CY2-5856-ET-3201	Knobsets Carolina series, Entrance function, PSS finish, BS 70mm, ANSI2, Blister	PR	PSS	BRASS SS 304	BLISTER	460
40-CY2-5857-ET-3201	Knobsets Carolina series, Entrance function, PSS finish, BS 70mm, ANSI2, Blister	PR	PSS	BRASS SS 304	BLISTER	460
40-CY2-5857-ET-0211	Knobsets Carolina series, Entrance function, PB finish, BS 70mm, ANSI2, Box	PR	PB	BRASS SS 304	BOX	460
40-CY2-5857-ET-0911	Knobsets Carolina series, Entrance function, AB finish, BS 70mm, ANSI2, Box	PR	AB	BRASS SS 304	BOX	460
40-CY2-5856-BK-3101	Knobsets Carolina series, Privacy function, SSS finish, BS 60mm, ANSI2, Blister	PR	SSM	BRASS SS 304	BLISTER	460
40-CY2-5856-BK-3111	Knobsets Carolina series, Privacy function, SSS finish, BS 60mm, ANSI2, Box	PR	SSM	BRASS SS 304	BOX	460
40-CY3-5866-BK-3111	Knobsets Carolina series, Privacy function, SSS finish, BS 60mm, ANSI3, Box	PR	SSM	BRASS SS 304	BOX	460
40-CY2-5857-BK-3111	Knobsets Carolina series, Privacy function, SSS finish, BS 70mm, ANSI2, Box	PR	SSM	BRASS SS 304	BOX	460
40-CY2-5857-BK-3101	Knobsets Carolina series, Privacy function, SSS finish, BS 70mm, ANSI2, Blister	PR	SSM	BRASS SS 304	BLISTER	460
40-CY3-5866-ET-3101	Knobsets Carolina series, Entrance function, SSS finish, BS 60mm, ANSI3, Blister	PR	SSM	BRASS SS 304	BLISTER	460
40-CY3-5866-ET-3111	Knobsets Carolina series, Entrance function, SSS finish, BS 60mm, ANSI3, Box	PR	SSM	BRASS SS 304	BOX	460
40-CY3-5866-ET-3201	Knobsets Carolina series, Entrance function, PSS finish, BS 60mm, ANSI3, Blister	PR	PSS	BRASS SS 304	BLISTER	460
40-CY3-5786-ET-3201	Knobsets Brandy series, Entrance function, PSS finish, BS 60mm, ANSI3, Blister	PR	PSS	BRASS SS 304	BLISTER	460
40-CY3-5786-ET-3211	Knobsets Brandy series, Entrance function, PSS finish, BS 60mm, ANSI3, Box	PR	PSS	BRASS SS 304	BOX	460
40-CY3-5866-ET-0901	Knobsets Carolina series, Entrance function, AB finish, BS 60mm, ANSI3, Blister	PR	AB	BRASS SS 304	BLISTER	460
40-CY3-5866-ET-0201	Knobsets Carolina series, Entrance function, PB finish, BS 60mm, ANSI3, Blister	PR	PB	BRASS SS 304	BLISTER	460
40-CY3-5867-ET-3101	Knobsets Carolina series, Entrance function, SSS finish, BS 70mm, ANSI3, Blister	PR	SSM	BRASS SS 304	BLISTER	460
40-CY3-5867-ET-3111	Knobsets Carolina series, Entrance function, SSS finish, BS 70mm, ANSI3, Box	PR	SSM	BRASS SS 304	BOX	460
40-CY3-5867-ET-3201	Knobsets Carolina series, Entrance function, PSS finish, BS 70mm, ANSI3, Blister	PR	PSS	BRASS SS 304	BLISTER	460

Cylindrical knobsets - Grade 2
Ball design

SKU	DESCRIPTION	UOM	FIN	MAT	PKG	WGT
40-CY3-5867-ET-0201	Knobsets Carolina series, Entrance function, PB finish, BS 70mm, ANSI3, Blister	PR	PB	BRASS SS 304	BLISTER	460
40-CY3-5867-ET-0901	Knobsets Carolina series, Entrance function, AB finish, BS 70mm, ANSI3, Blister	PR	AB	BRASS SS 304	BLISTER	460
40-CY3-5867-ET-0911	Knobsets Carolina series, Entrance function, AB finish, BS 70mm, ANSI3, Box	PR	AB	BRASS SS 304	BOX	460
40-CY3-5867-BK-3101	Knobsets Carolina series, Privacy function, SSS finish, BS 70mm, ANSI3, Blister	PR	SSM	BRASS SS 304	BLISTER	460
40-CY3-5867-BK-3111	Knobsets Carolina series, Privacy function, SSS finish, BS 70mm, ANSI3, Box	PR	SSM	BRASS SS 304	BOX	460
40-CY3-5786-ET-3101	Knobsets Brandy series, Entrance function, SSS finish, BS 60mm, ANSI3, Blister	PR	SSM	BRASS SS 304	BLISTER	460
40-CY2-5786-ET-3111	Knobsets Brandy series, Entrance function, SSS finish, BS 60mm, ANSI2, Box	PR	SSM	BRASS SS 304	BOX	460
40-CY3-5786-ET-3111	Knobsets Brandy series, Entrance function, SSS finish, BS 60mm, ANSI3, Box	PR	SSM	BRASS SS 304	BOX	460
40-CY3-5786-ET-0201	Knobsets Brandy series, Entrance function, PB finish, BS 60mm, ANSI3, Blister	PR	PB	BRASS SS 304	BLISTER	460
40-CY2-5786-ET-0211	Knobsets Brandy series, Entrance function, PB finish, BS 60mm, ANSI2, Box	PR	PB	BRASS SS 304	BOX	460
40-CY3-5786-ET-0211	Knobsets Brandy series, Entrance function, PB finish, BS 60mm, ANSI3, Box	PR	PB	BRASS SS 304	BOX	460
40-CY3-5786-ET-0901	Knobsets Brandy series, Entrance function, AB finish, BS 60mm, ANSI3, Blister	PR	AB	BRASS SS 304	BLISTER	460
40-CY3-5786-ET-0911	Knobsets Brandy series, Entrance function, AB finish, BS 60mm, ANSI3, Box	PR	AB	BRASS SS 304	BOX	460
40-CY2-5786-BK-3111	Knobsets Brandy series, Privacy function, SSS finish, BS 60mm, ANSI2, Box	PR	SSM	BRASS SS 304	BOX	460
40-CY3-5786-BK-0211	Knobsets Brandy series, Privacy function, PB finish, BS 60mm, ANSI3, Box	PR	PB	BRASS SS 304	BOX	460
40-CY3-5786-BK-0911	Knobsets Brandy series, Privacy function, AB finish, BS 60mm, ANSI3, Box	PR	AB	BRASS SS 304	BOX	460
40-CY3-5787-ET-3101	Knobsets Brandy series, Entrance function, SSS finish, BS 70mm, ANSI3, Blister	PR	SSM	BRASS SS 304	BLISTER	460
40-CY3-5787-ET-3111	Knobsets Brandy series, Entrance function, SSS finish, BS 70mm, ANSI3, Box	PR	SSM	BRASS SS 304	BOX	460
40-CY3-5787-ET-0201	Knobsets Brandy series, Entrance function, PB finish, BS 70mm, ANSI3, Blister	PR	PB	BRASS SS 304	BLISTER	460
40-CY3-5787-ET-0901	Knobsets Brandy series, Entrance function, AB finish, BS 70mm, ANSI3, Blister	PR	AB	BRASS SS 304	BLISTER	460
40-CY3-5787-ET-0211	Knobsets Brandy series, Entrance function, PB finish, BS 70mm, ANSI3, Box	PR	PB	BRASS SS 304	BOX	460

Security deadbolts

Key and turn / Key both sides

Specifications:
- Stainless steel or brass
- Brass cylinder and keys (3 keys)
- Adjustable bolt 60-70mm backset
- Suitable for door 35-45mm thick

Features:
- Key and turn operation or key operation from both side
- Reversible for left or right hand doors

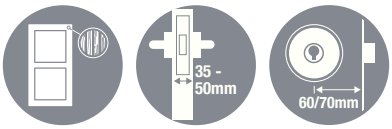

SKU	DESCRIPTION	UOM	FIN	MAT	PKG	WGT
X-8011US26	Security bolt, BS 60&70mm, dr thick 35-45mm, 3 key, Key and turn, Satin chrome, Box	PR	SC	BRASS SS 304	BOX	460
X-8011US3	Security bolt, BS 60&70mm, dr thick 35-45mm, 3 key, Key and turn, Polished brass, Box	PR	PB	BRASS SS 304	BOX	460
X-8011US32D	Security bolt, BS 60&70mm, dr thick 35-45mm, 3 key, Key and turn, Satin stainless steel, Box	PR	SSM	BRASS SS 304	BOX	460
X-8021US3	Security bolt, BS 60&70mm, dr thick 35-45mm, 3 key, Key both sides, Polished brass, Box	PR	PB	BRASS SS 304	BOX	460
X-8021US32D	Security bolt, BS 60&70mm, dr thick 35-45mm, 3 key, Key both sides, Satin stainless steel, Box	PR	SSM	BRASS SS 304	BOX	460
XV-8011US26	Security bolt, BS 60&70mm, dr thick 35-45mm, 3 key, Key and turn, Satin chrome, Blister	PR	SC	BRASS SS 304	BLISTER	460
XV-8011US3	Security bolt, BS 60&70mm, dr thick 35-45mm, 3 key, Key and turn, Polished brass, Blister	PR	PB	BRASS SS 304	BLISTER	460
XV-8011US32D	Security bolt, BS 60&70mm, dr thick 35-45mm, 3 key, Key and turn, Satin stainless steel, Blister	PR	SSM	BRASS SS 304	BLISTER	460

Decorative handle knobset
Raffaello

Specifications:
- Forged brass handle and deadbolt cylinder rosette
- Adjustable 60-70mm backset latch and deadbolt
- Security deadbolt with anti-saw pins
- Latch operated by handle from outside and knob from inside
- Deadbolt operation by key from outside and turn from inside

Features:
- Conforms to ANSI grade 3 requirements
- Suitable for door thickness 35-50mm

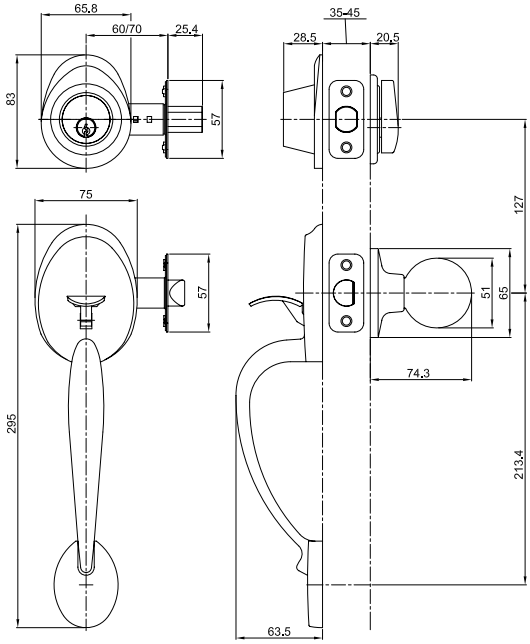

SKU	DESCRIPTION	UOM	FIN	MAT	PKG	WGT
NV/CA5057PVD	Decorative knobset, Raffello series, Adj BS60&70mm, ANSI grade 3, Dr thnick 35-50mm, Satin chrome, Blister	SET	SC	BRASS	BLISTER	980
NV/CA5057US15	Decorative knobset, Raffello series, Adj BS60&70mm, ANSI grade 3, Dr thnick 35-50mm, Satin nickel, Box	SET	SN	BRASS	BOX	980
NV/CA5057US26	Decorative knobset, Raffello series, Adj BS60&70mm, ANSI grade 3, Dr thnick 35-50mm, Polished chrome, Box	SET	PC	BRASS	BOX	980
NV/CA5057US3	Decorative knobset, Raffello series, Adj BS60&70mm, ANSI grade 3, Dr thnick 35-50mm, Polished brass, Box	SET	PB	BRASS	BOX	980
NV/CA5057US5	Decorative knobset, Raffello series, Adj BS60&70mm, ANSI grade 3, Dr thnick 35-50mm, Antique brass, Box	SET	AB	BRASS	BOX	980

Decorative handle knobset
Leonardo

Specifications:
- Forged brass handle and deadbolt cylinder rosette
- Adjustable 60-70mm backset latch and deadbolt
- Security deadbolt with anti-saw pins
- Latch operated by handle from outside and knob from inside
- Deadbolt operation by key from outside and turn from inside

Features:
- Conforms to ANSI grade 3 requirements
- Suitable for door thickness 35-50mm

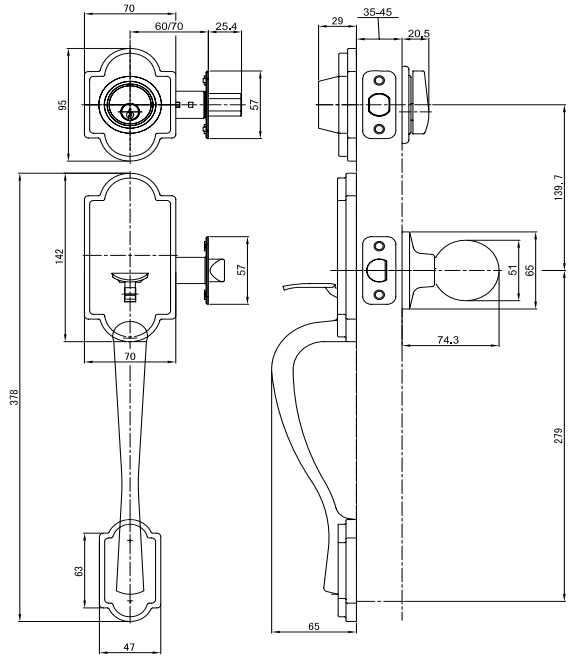

SKU	DESCRIPTION	UOM	FIN	MAT	PKG	WGT
NV/CA5257US15	Decorative knobset, Leonardo series, Adj BS60&70mm, ANSI grade 3, Dr thnick 35-50mm, Satin nickel, Blister	SET	SN	BRASS	BLISTER	980
NV/CA5257US26	Decorative knobset, Leonardo series, Adj BS60&70mm, ANSI grade 3, Dr thnick 35-50mm, Satin chrome, Blister	SET	SC	BRASS	BLISTER	980
NV/CA5257US3	Decorative knobset, Leonardo series, Adj BS60&70mm, ANSI grade 3, Dr thnick 35-50mm, Polished brass, Blister	SET	PB	BRASS	BLISTER	980
NV/CA5257US5	Decorative knobset, Leonardo series, Adj BS60&70mm, ANSI grade 3, Dr thnick 35-50mm, Antique brass, Blister	SET	AB	BRASS	BLISTER	980

Cylinders

Cylinder Type

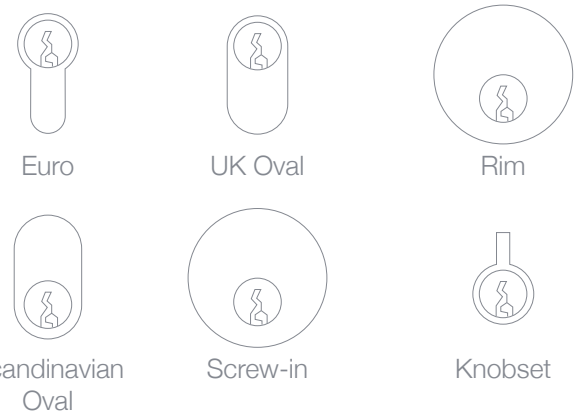

Yale cylinders have the following characteristics:

• Within the profile cylinders, which are variable in steps, pairs of pins trace the key profile.

• Maximum number of key changes results from the number of pairs of pins and the possible versions of steps.

• All cylinders comply with and in major characteristics exceed the requirements of EN 1303 and DIN 18 252: 09/1999

Cylinder Components

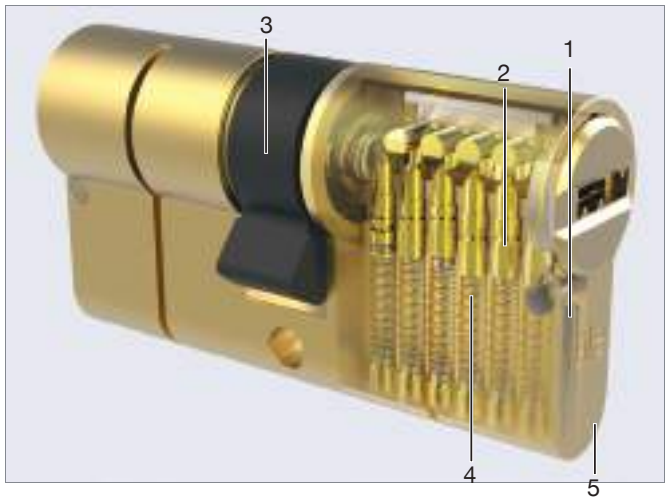

1. Core
2. Core pin
3. Locking pin with spring
4. Housing pin with spring
5. Cylinder housing

Application

Locking Cylinders are categorized according to:

Front View | **Side View**

Profile Cylinder

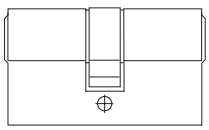
Double Cylinder (key + key)

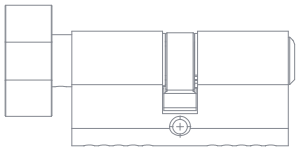
Double Cylinder (key or emergency release + knob)

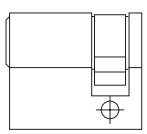
Single Cylinder

The definition of important components and characteristics of locking cylinders in this catalogue follows generally the terminology according to EN 1303 with 18 252/09-1999.

Single Cylinder

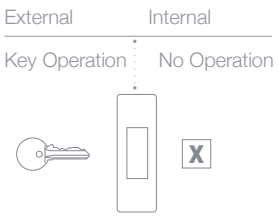

Double Cylinder

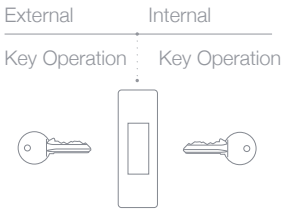

Thumbturn Cylinder

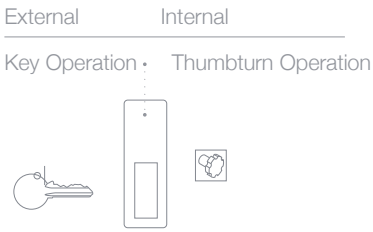

Single Cylinder with Knob

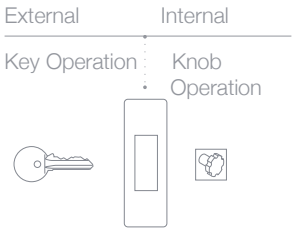

Double Cylinder with Knob and Emergency Release

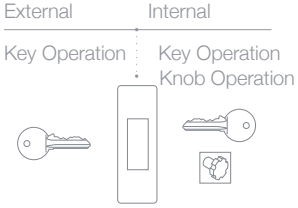

How to Measure Your Cylinder

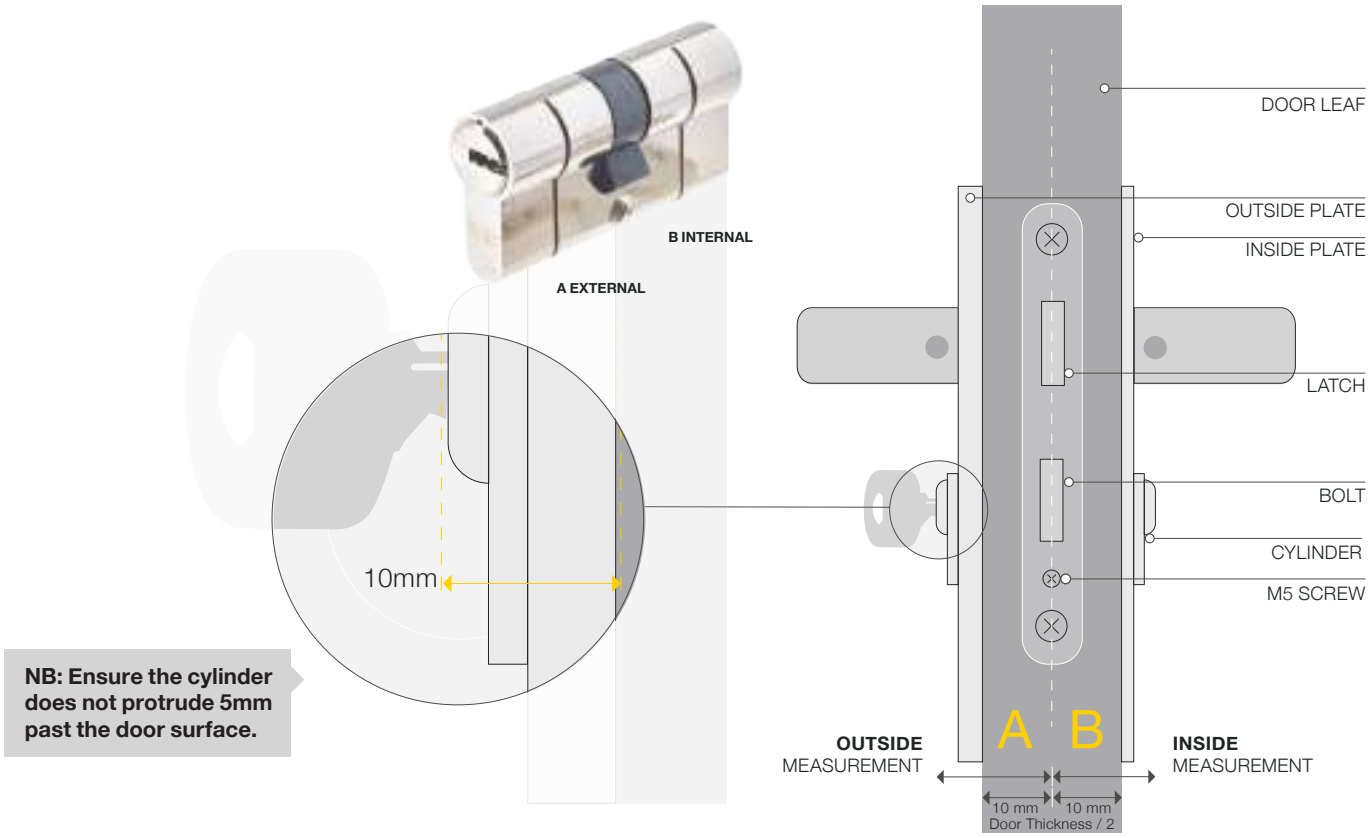

NB: Ensure the cylinder does not protrude 5mm past the door surface.

How to Change Your Cylinder

1.

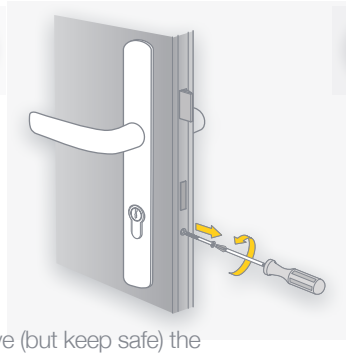

Remove (but keep safe) the screw to release the cylinder.

2.

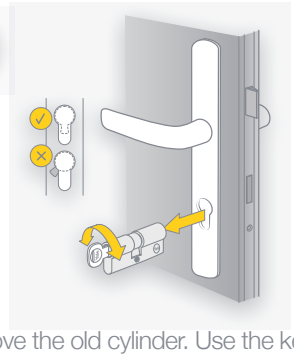

Remove the old cylinder. Use the key to align the cam with the cylinder housing in order to push in/pull out the cylinder

NB: Twist key in both directions to find out where the cylinder cam is.

3.

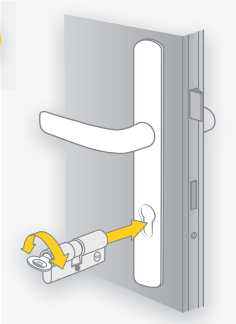

Insert the new Yale cylinder and turn the key to check alignment

4.

Turn the key to the unlock position

5.

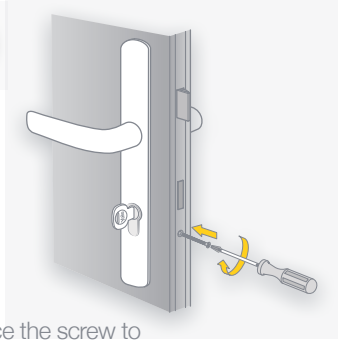

Replace the screw to secure the cylinder

Specification

BS EN 1303: 2005 classifies cylinders for locks using an 8 digit coding system. A broadly similar classification system is used for other building hardware product standards. Each digit refers to a particular feature of the product measured against the standard's performance requirements.

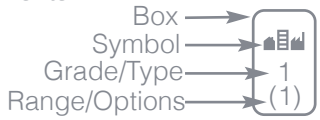

Digit 1 Category of use

One category is identified:

Grade1: Keys shall resist a torque of 2.5Nm and still be usable.

Digit 2 Durability

Three grades are identified according to the number of test cycles achieved:

Grade 4: 25 000 cycles

Grade 5: 50 000 cycles

Grade 6: 100 000 cycles

Digit 3 Door mass

No requirement.

Digit 4 Fire resistance

Two grades are identified as follows:

Grade 0: not suitable for fire/smoke resistant door assemblies

Grade 1: suitable for fire/smoke resistant door assemblies subject to satisfactory assessment of the contribution of the cylinder to the fire resistance of the specified fire/smoke door assemblies. Such assessment is beyond the scope of this European standard (see EN 1634-1).

Digit 5 Safety

No requirement.

EXAMPLE:

The following marking denotes a cylinder meeting the required category of use Grade 1, durability Grade 6 (100 000 cycles), no requirement for door mass, no fire resistance or safety in use requirement, having Grade A corrosion resistance, Grade 4 key related security and Grade 1 attack resistance.

Digit 6 Corrosion and temperature resistance

Four grades are identified as follows:

Grade 0: no corrosion or temperature resistance requirements

Grade A: BS EN 1670 Grade 3 corrosion resistance (96 hours NSS): no temperature resistance requirement

Grade B: No corrosion resistance requirement: resistance to -20 / +80°C temperature extremes

Grade C: BS EN 1670 Grade 3 corrosion resistance: resistance to -20 / +80°C temperature extremes

Note:

- No distinction is made between the inside and the outside of either the cylinder and/or the door.
- On completion of the test, the cylinder must operate using a maximum 1.5 Nm torque on the key.

Digit 7 Key related security

Six grades are identified and the principal requirements are summarised in Table 1 below:

	Grade					
	1	2	3	4	5	6
Minimum number of effective differs	100	300	15.000	30.000	30.000	100.000
Minimum number of movable levers, pins, discs, etc	2	3	5	5	6	6
Coding on key could disclose combination	Yes	Yes	No	No	No	No
Torque resistance of plug	2.5Nm	5Nm	15Nm	15Nm	15Nm	15Nm

Digit 8 Attack resistance

Three grades are identified and the principal requirements are summarised in Table 2 below:

	Grade		
	0	1	2
Resistance to drilling (net drilling time)	-	3 mins	5 mins
Resistance to chisel attack (number of defined blows)	-	30	40
Resistance to twisting attack (number of defined twists)	-	20	30
Resistance to plug/cylinder extraction (pull load)	-	15 kN	15 kN
Torque resistance of plug/cylinder	-	20 Nm	30 Nm

Range	2000 plus	1500 plus	1000 plus	600 plus	500 plus
Patent	Y	Y	Y	Y	Y
Qty Keys	5	5	5	3	3
Qty Pins	10	6	6	6	5
Anti Drill	Y	–	–	–	–
Anti Pick	Y	Y	Y	Y	Y
Anti Snap	–	Y	–	–	–
Key Card	Y	Y	Y	–	–

Your Advantages

- The blank keys for patented cylinder are controlled by Yale and can only be cut by authorised dealers
- Security card for proof of ownership for extra keys (1000/1500/2000 + series)
- Key blanks are not available in the high street
- Patent protection
- Conforms to EN1303:2015

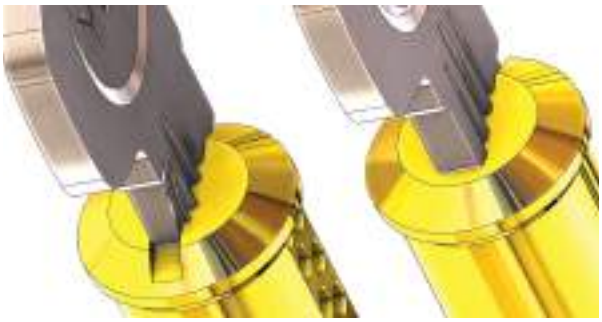

Patented

Non-Patented

The Yale non patented cylinder - the front face of the plug creates a stopper for the key shoulder. On the patented version there is a bottom groove that makes a stopper for the key shoulder to fit. Therefore, a non patented key would not fit in a patented cylinder.

There is a clear difference between key shoulders of these two versions too. The non patented one has a key shoulder of the full key thickness while the patented one's shoulder is reduced to 1.75 mm.

Why buy Patented Cylinders?

Protection against unauthorised key duplication
The security of any keyed system can quickly be compromised if keys are lost or not returned. Controlling who has access to keys can be further compromised if key blanks are available on any high street. The blank keys for patented cylinder are controlled by Yale and can only be cut by authorised dealers. With our 1000, 1500 and 2000 series patented cylinders, you will be required to present your key order card to your authorised dealers for key duplication.

Patent protection Our cylinders are protected by the following patent: EP1523603B1

Higher security than any other cylinder Our range of patented cylinders offers enhanced resistance to picking, drilling and other forms of lock manipulation.

Anti-picking protection Anti-picking protection is provided by special pins inside the cylinder.

Anti-drilling protection Special pins also provide anti-drill protection.

Snap protection Security is not compromised even if cylinder is attacked through snapping.

500 Plus series – Euro profile cylinder and turn

- Standard Euro Profile Cylinder – 5 pins
- Available in polished brass and satin nickel, chrome & antiqued
- Available as single, double and turn Euro profile cylinder

1000 Plus series – Euro profile cylinder and turn

- Standard security Euro Profile cylinder with dimple keys – 6 pins
- Available in polished brass and satin nickel, chrome & antiqued
- Available as single, double and turn Euro profile cylinder

* When installed with Yale Y2G-HSLL Security Handle

2000 plus series – Euro profile cylinder and turn

- High security Euro profile cylinder with dimple keys – 10 pins
- Available in polished brass and satin nickel, chrome & antiqued
- Available as single, double and turn Euro profile cylinder

* When installed with Yale Y2G-HSLL Security Handle

600 Plus series – Euro profile cylinder and turn

- Standard Euro Profile Cylinder – 6 pins
- Available in polished brass and satin nickel, chrome & antiqued
- Available as single, double and turn Euro profile cylinder

1500 Plus series – Euro profile cylinder and turn

- Standard security break secure Euro profile cylinder with dimple keys – 6 pins
- Available in polished brass and satin nickel, chrome & antiqued
- Available in double and turn Euro profile cylinder

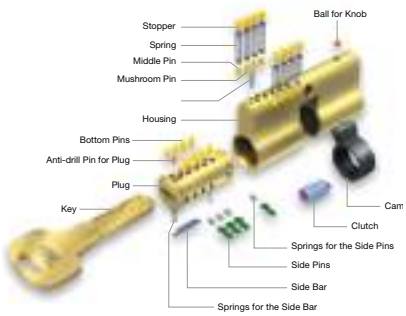

Yale Middle East Cylinder Comparison Sheet		1500 SERIES	1000 SERIES	500 SEIRES	210 SEIRES	214 SEIRES	215 SEIRES	212 SERIES	1152 SERIES
Cylinder Type	EURO PROFILE CYLINDER (1 PC)		●	●	●	●	●	●	
	EURO PROFILE CYLINDER (SPLIT)	●							
	RIM CYLINDER								
	CROSS CYLINDER								●
	SCREW IN CYLINDER								
Cylinder Key/Knob combination	KEY + KEY	●	●	●	●				
	KEY + KNOB		●	●		●			
	KNOB + EMERGENCY			●			●		
	KEY + AXEL								
	KEY (One side only)		●	●				●	●
	INTERNAL KEY + EXTERNAL KEY								
Knob Type	CIRCLE					●	●		
	L SHAPE								
	OVAL SHAPE		●	●					
Cylinder Shape	EURO SHAPE	●	●	●	●	●	●	●	
	OVAL SHAPE								
	ROUND SHAPE								●
Suitalbility for lock type	EUROPEAN MORTICE (REGULAR)	●	●	●	●	●	●	●	
	EUROPEAN MORTICE (NARROW)	●	●	●	●	●	●	●	
	RIM LOCK								●
Security Type	HIGH								
	MEDIUM	●	●						
	STANDARD			●	●	●	●	●	●
Torque Resistance	Key to resist torque of 2.5n	●	●	●					
Cycle testing	Grade 5: 50000 Cycles			●	●	●	●	●	●
	Grade 6: 100000 Cycles	●	●						
Fire resistance	Grade 0: Non-Fire rated	●	●	●	●	●	●	●	●
	Grade 1: Fire rated								
Corrosion & Temprature resistance	Grade A:96hrs corrosion resistance, no temprature resistance			●	●	●	●	●	●
	Grade C: 96hrs corrosion resistance, -20°/+80° C temprature resistance	●	●						
Key combinations	Grade 5: 50000		●	●	●	●			
	Grade 6: 100000	●							
Protection	ANTI DRILLING	●	●						
	ANTI PICKING	●	●	●					
	ANTI BREAKAGE	●							
	KEY DUPLICATION PROTECTION								
Key Type	TRADITIONAL			●	●	●		●	●
	COMPUTERISED	●	●						
	CROSS								
Key turn	ONE SIDE			●	●	●		●	●
	REVERSABLE	●	●						
Key code card	CODE CARD	●	●						
Profile Material	BRASS	●	●	●	●	●	●	●	●
Finish	SATIN NICKEL	●	●	●	●	●	●	●	●
	POLISH BRASS	●	●	●	●	●	●	●	
	ANTIQUE BRASS		●	●					
	CHROME POLISH		●	●					●
Pins	5 PIN			●	●	●	●	●	●
	6 PIN	●	●						
	10 PIN								
Alignment	OFFSET	●	●	●	●	●	●	●	
	CENTER	●	●	●	●	●	●	●	●
Patent Design	YALE PATENTED DESIGN	●	●		●	●		●	
No. of keys	3 KEYS			●	●	●		●	●
	5 KEYS	●	●						
EN standard	1303:2005	●	●	●					
Keying Solution Options	KEYED DIFFERENT	●	●	●	●	●		●	●
	KEY ALIKE			●	●	●		●	
	BLANK KEY	●	●	●					
	CONSTRUCTION KEY								
Packaging Type	BOX		●	●	●	●	●	●	●
	BLISTER	●	●	●					

Double Euro Profile Cylinders
1500 Series

Specifications:
- Double euro profile cylinder - Key + Key
- Medium security
- Brass Material
- Tested to EN1303:2005
- Size available from 54mm - 100mm
- Finish available - Satin Nickel, Polish Brass, Antique Brass, Chrome Polish
- Type: Entrance, Bedroom Function

Key Highlights:
- Yale patented
- Dimple key
- 6 pins
- Supplied with 5 keys
- Key code card
- Anti drilling
- Anti picking
- Reversible keys
- Drill protection
- Anti breakage

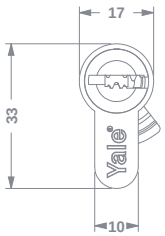

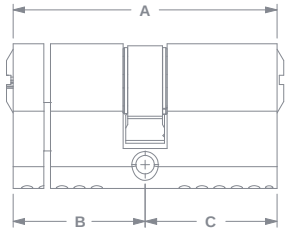

SKU	DESCRIPTION	UOM	FIN	MAT	PKG	WGT
10-1502-2727-00-0201	1500 Series double euro profile cylinder, key+key, 54=27mm+27mm, Polished Brass, Blister	PC	PB	BRASS	BLIST	250
10-1502-2727-00-2201	1500 Series double euro profile cylinder, key+key, 54=27mm+27mm, Satin Nickel, Blister	PC	SN	BRASS	BLIST	250
10-1502-2730-00-0201	1500 Series double euro profile cylinder, key+key, 57=27mm+30mm, Polished Brass, Blister	PC	PB	BRASS	BLIST	260
10-1502-2730-00-2201	1500 Series double euro profile cylinder, key+key, 57=27mm+30mm, Satin Nickel, Blister	PC	SN	BRASS	BLIST	260
10-1502-2735-00-0201	1500 Series double euro profile cylinder, key+key, 62=27mm+35mm, Polished Brass, Blister	PC	PB	BRASS	BLIST	275
10-1502-2735-00-2201	1500 Series double euro profile cylinder, key+key, 62=27mm+35mm, Satin Nickel, Blister	PC	SN	BRASS	BLIST	275
10-1502-3030-00-0201	1500 Series double euro profile cylinder, key+key, 60=30mm+30mm, Polished Brass, Blister	PC	PB	BRASS	BLIST	270
10-1502-3030-00-2201	1500 Series double euro profile cylinder, key+key, 60=30mm+30mm, Satin Nickel, Blister	PC	SN	BRASS	BLIST	270
10-1502-3035-00-0201	1500 Series double euro profile cylinder, key+key, 65=30mm+35mm, Polished Brass, Blister	PC	PB	BRASS	BLIST	280
10-1502-3035-00-2201	1500 Series double euro profile cylinder, key+key, 65=30mm+35mm, Satin Nickel, Blister	PC	SN	BRASS	BLIST	280
10-1502-3040-00-0201	1500 Series double euro profile cylinder, key+key, 70=30mm+40mm, Polished Brass, Blister	PC	PB	BRASS	BLIST	290

Double Euro Profile Cylinders
1500 Series

SKU	DESCRIPTION	UOM	FIN	MAT	PKG	WGT
10-1502-3040-00-2201	1500 Series double euro profile cylinder, key+key, 70=30mm+40mm, Satin Nickel, Blister	PC	SN	BRASS	BLIST	290
10-1502-3045-00-0201	1500 Series double euro profile cylinder, key+key, 75=30mm+45mm, Polished Brass, Blister	PC	PB	BRASS	BLIST	300
10-1502-3045-00-2201	1500 Series double euro profile cylinder, key+key, 75=30mm+45mm, Satin Nickel, Blister	PC	SN	BRASS	BLIST	300
10-1502-3050-00-0201	1500 Series double euro profile cylinder, key+key, 80=30mm+50mm, Polished Brass, Blister	PC	PB	BRASS	BLIST	310
10-1502-3050-00-2201	1500 Series double euro profile cylinder, key+key, 80=30mm+50mm, Satin Nickel, Blister	PC	SN	BRASS	BLIST	310
10-1502-3131-00-0201	1500 Series double euro profile cylinder, key+key, 62=31mm+31mm, Polished Brass, Blister	PC	PB	BRASS	BLIST	275
10-1502-3131-00-2201	1500 Series double euro profile cylinder, key+key, 62=31mm+31mm, Satin Nickel, Blister	PC	SN	BRASS	BLIST	275
10-1502-3137-00-0201	1500 Series double euro profile cylinder, key+key, 68=31mm+37mm, Polished Brass, Blister	PC	PB	BRASS	BLIST	280
10-1502-3137-00-2201	1500 Series double euro profile cylinder, key+key, 68=31mm+37mm, Satin Nickel, Blister	PC	SN	BRASS	BLIST	280
10-1502-3535-00-0201	1500 Series double euro profile cylinder, key+key, 70=35mm+35mm, Polished Brass, Blister	PC	PB	BRASS	BLIST	290
10-1502-3535-00-2201	1500 Series double euro profile cylinder, key+key, 70=35mm+35mm, Satin Nickel, Blister	PC	SN	BRASS	BLIST	290
10-1502-3540-00-0201	1500 Series double euro profile cylinder, key+key, 75=35mm+40mm, Polished Brass, Blister	PC	PB	BRASS	BLIST	300
10-1502-3540-00-2201	1500 Series double euro profile cylinder, key+key, 75=35mm+40mm, Satin Nickel, Blister	PC	SN	BRASS	BLIST	300
10-1502-3545-00-0201	1500 Series double euro profile cylinder, key+key, 80=35mm+45mm, Polished Brass, Blister	PC	PB	BRASS	BLIST	310
10-1502-3545-00-2201	1500 Series double euro profile cylinder, key+key, 80=35mm+45mm, Satin Nickel, Blister	PC	SN	BRASS	BLIST	310
10-1502-3550-00-0201	1500 Series double euro profile cylinder, key+key, 85=35mm+50mm, Polished Brass, Blister	PC	PB	BRASS	BLIST	320
10-1502-3550-00-2201	1500 Series double euro profile cylinder, key+key, 85=35mm+50mm, Satin Nickel, Blister	PC	SN	BRASS	BLIST	320
10-1502-3555-00-0201	1500 Series double euro profile cylinder, key+key, 90=35mm+55mm, Polished Brass, Blister	PC	PB	BRASS	BLIST	330
10-1502-3555-00-2201	1500 Series double euro profile cylinder, key+key, 90=35mm+55mm, Satin Nickel, Blister	PC	SN	BRASS	BLIST	330
10-1502-3565-00-0201	1500 Series double euro profile cylinder, key+key, 100=35mm+65mm, Polished Brass, Blister	PC	PB	BRASS	BLIST	350
10-1502-3565-00-2201	1500 Series double euro profile cylinder, key+key, 100=35mm+65mm, Satin Nickel, Blister	PC	SN	BRASS	BLIST	350
10-1502-4040-00-0201	1500 Series double euro profile cylinder, key+key, 80=40mm+40mm, Polished Brass, Blister	PC	PB	BRASS	BLIST	310
10-1502-4040-00-2201	1500 Series double euro profile cylinder, key+key, 80=40mm+40mm, Satin Nickel, Blister	PC	SN	BRASS	BLIST	310
10-1502-4045-00-0201	1500 Series double euro profile cylinder, key+key, 85=40mm+45mm, Polished Brass, Blister	PC	PB	BRASS	BLIST	320
10-1502-4045-00-2201	1500 Series double euro profile cylinder, key+key, 85=40mm+45mm, Satin Nickel, Blister	PC	SN	BRASS	BLIST	320

Double Euro Profile Cylinders
1500 Series

SKU	DESCRIPTION	UOM	FIN	MAT	PKG	WGT
10-1502-4050-00-0201	1500 Series double euro profile cylinder, key+key, 90=40mm+50mm, Polished Brass, Blister	PC	PB	BRASS	BLIST	330
10-1502-4050-00-2201	1500 Series double euro profile cylinder, key+key, 90=40mm+50mm, Satin Nickel, Blister	PC	SN	BRASS	BLIST	330
10-1502-4545-00-0201	1500 Series double euro profile cylinder, key+key, 90=45mm+45mm, Polished Brass, Blister	PC	PB	BRASS	BLIST	330
10-1502-4545-00-2201	1500 Series double euro profile cylinder, key+key, 90=45mm+45mm, Satin Nickel, Blister	PC	SN	BRASS	BLIST	330
10-1502-4550-00-0201	1500 Series double euro profile cylinder, key+key, 95=45mm+50mm, Polished Brass, Blister	PC	PB	BRASS	BLIST	350
10-1502-4550-00-2201	1500 Series double euro profile cylinder, key+key, 95=45mm+50mm, Satin Nickel, Blister	PC	SN	BRASS	BLIST	350
10-1502-5050-00-0201	1500 Series double euro profile cylinder, key+key, 100=50mm+50mm, Polished Brass, Blister	PC	PB	BRASS	BLIST	360
10-1502-5050-00-2201	1500 Series double euro profile cylinder, key+key, 100=50mm+50mm, Satin Nickel, Blister	PC	SN	BRASS	BLIST	360
10-1502-5055-00-0201	1500 Series double euro profile cylinder, key+key, 105=50mm+55mm, Polished Brass, Blister	PC	PB	BRASS	BLIST	370
10-1502-5055-00-2201	1500 Series double euro profile cylinder, key+key, 105=50mm+55mm, Satin Nickel, Blister	PC	SN	BRASS	BLIST	370
10-1502-5555-00-0201	1500 Series double euro profile cylinder, key+key, 110=55mm+55mm, Polished Brass, Blister	PC	PB	BRASS	BLIST	380
10-1502-5555-00-2201	1500 Series double euro profile cylinder, key+key, 110=55mm+55mm, Satin Nickel, Blister	PC	SN	BRASS	BLIST	380
10-1502-6055-00-0201	1500 Series double euro profile cylinder, key+key, 115=60mm+55mm, Polished Brass, Blister	PC	PB	BRASS	BLIST	390
10-1502-6055-00-2201	1500 Series double euro profile cylinder, key+key, 115=60mm+55mm, Satin Nickel, Blister	PC	SN	BRASS	BLIST	390
10-1502-6060-00-0201	1500 Series double euro profile cylinder, key+key, 120=60mm+60mm, Polished Brass, Blister	PC	PB	BRASS	BLIST	400
10-1502-6060-00-2201	1500 Series double euro profile cylinder, key+key, 120=60mm+60mm, Satin Nickel, Blister	PC	SN	BRASS	BLIST	400
10-1502-6065-00-0201	1500 Series double euro profile cylinder, key+key, 125=60mm+65mm, Polished Brass, Blister	PC	PB	BRASS	BLIST	410
10-1502-6065-00-2201	1500 Series double euro profile cylinder, key+key, 125=60mm+65mm, Satin Nickel, Blister	PC	SN	BRASS	BLIST	410
10-1502-6565-00-0201	1500 Series double euro profile cylinder, key+key, 130=65mm+65mm, Polished Brass, Blister	PC	PB	BRASS	BLIST	420
10-1502-6565-00-2201	1500 Series double euro profile cylinder, key+key, 130=65mm+65mm, Satin Nickel, Blister	PC	SN	BRASS	BLIST	420
10-1502-6570-00-0201	1500 Series double euro profile cylinder, key+key, 135=65mm+70mm, Polished Brass, Blister	PC	PB	BRASS	BLIST	430
10-1502-6570-00-2201	1500 Series double euro profile cylinder, key+key, 135=65mm+70mm, Satin Nickel, Blister	PC	SN	BRASS	BLIST	430
10-1502-7070-00-0201	1500 Series double euro profile cylinder, key+key, 140=70mm+70mm, Polished Brass, Blister	PC	PB	BRASS	BLIST	440
10-1502-7070-00-2201	1500 Series double euro profile cylinder, key+key, 140=70mm+70mm, Satin Nickel, Blister	PC	SN	BRASS	BLIST	440
10-1502-7075-00-0201	1500 Series double euro profile cylinder, key+key, 145=70mm+75mm, Polished Brass, Blister	PC	PB	BRASS	BLIST	450

Double Euro Profile Cylinders
1500 Series

SKU	DESCRIPTION	UOM	FIN	MAT	PKG	WGT
10-1502-7075-00-2201	1500 Series double euro profile cylinder, key+key, 145=70mm+75mm, Satin Nickel, Blister	PC	SN	BRASS	BLIST	450
10-1502-7575-00-0201	1500 Series double euro profile cylinder, key+key, 150=75mm+75mm, Polished Brass, Blister	PC	PB	BRASS	BLIST	460
10-1502-7575-00-2201	1500 Series double euro profile cylinder, key+key, 150=75mm+75mm, Satin Nickel, Blister	PC	SN	BRASS	BLIST	460
10-1502-7580-00-0201	1500 Series double euro profile cylinder, key+key, 155=75mm+80mm, Polished Brass, Blister	PC	PB	BRASS	BLIST	470
10-1502-7580-00-2201	1500 Series double euro profile cylinder, key+key, 155=75mm+80mm, Satin Nickel, Blister	PC	SN	BRASS	BLIST	470
10-1502-8080-00-0201	1500 Series double euro profile cylinder, key+key, 160=80mm+80mm, Polished Brass, Blister	PC	PB	BRASS	BLIST	480
10-1502-8080-00-2201	1500 Series double euro profile cylinder, key+key, 160=80mm+80mm, Satin Nickel, Blister	PC	SN	BRASS	BLIST	480

Double Euro Profile Cylinders
1000 Series

Specifications:
- Double euro profile cylinder - Key + Key, Key + Knob
- Single euro profile cylinder - One side key
- Medium security
- Brass Material
- Tested to EN1303:2005
- Size available from 45mm - 140mm
- Finish available - Satin Nickel, Polish Brass, Antique Brass
- Type: Entrance, Bedroom Function

Key Highlights:
- Yale patented
- Dimple key
- 6 pins
- Supplied with 5 keys
- Key code card
- Anti drilling
- Anti picking

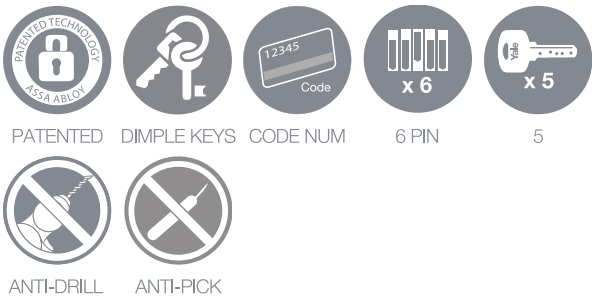

Double Euro Profile

Double Euro Profile with Knob

Single Profile

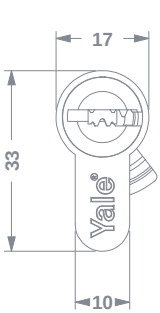

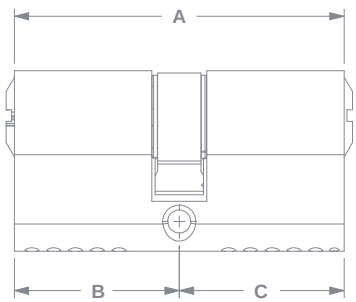

Double Euro Profile Cylinders

1000 Series

KEY + KEY

SKU	DESCRIPTION	UOM	FIN	MAT	PKG	WGT
10-1002-2727-00-0201	1000 Series double euro profile cylinder, key + key, 54=27mm+27mm, Polished Brass, Blister	PC	PB	BRASS	BLIST	250
10-1002-2727-00-2201	1000 Series double euro profile cylinder, key + key, 54=27mm+27mm, Satin Nickel, Blister	PC	SN	BRASS	BLIST	250
10-1002-2730-00-0201	1000 Series double euro profile cylinder, key + key, 57=27mm+30mm, Polished Brass, Blister	PC	PB	BRASS	BLIST	260
10-1002-2730-00-2201	1000 Series double euro profile cylinder, key + key, 57=27mm+30mm, Satin Nickel, Blister	PC	SN	BRASS	BLIST	260
10-1002-2735-00-0201	1000 Series double euro profile cylinder, key + key, 62=27mm+35mm, Polished Brass, Blister	PC	PB	BRASS	BLIST	275
10-1002-2735-00-2201	1000 Series double euro profile cylinder, key + key, 62=27mm+35mm, Satin Nickel, Blister	PC	SN	BRASS	BLIST	275
10-1002-3030-00-0201	1000 Series double euro profile cylinder, key + key, 60=30mm+30mm, Polished Brass, Blister	PC	PB	BRASS	BLIST	270
10-1002-3030-00-2201	1000 Series double euro profile cylinder, key + key, 60=30mm+30mm, Satin Nickel, Blister	PC	SN	BRASS	BLIST	270
10-1002-3035-00-0201	1000 Series double euro profile cylinder, key + key, 65=30mm+35mm, Polished Brass, Blister	PC	PB	BRASS	BLIST	280
10-1002-3035-00-2201	1000 Series double euro profile cylinder, key + key, 65=30mm+35mm, Satin Nickel, Blister	PC	SN	BRASS	BLIST	280
10-1002-3040-00-0201	1000 Series double euro profile cylinder, key + key, 70=30mm+40mm, Polished Brass, Blister	PC	PB	BRASS	BLIST	290
10-1002-3040-00-2201	1000 Series double euro profile cylinder, key + key, 70=30mm+40mm, Satin Nickel, Blister	PC	SN	BRASS	BLIST	290
10-1002-3045-00-0201	1000 Series double euro profile cylinder, key + key, 75=30mm+45mm, Polished Brass, Blister	PC	PB	BRASS	BLIST	300
10-1002-3045-00-2201	1000 Series double euro profile cylinder, key + key, 75=30mm+45mm, Satin Nickel, Blister	PC	SN	BRASS	BLIST	300
10-1002-3050-00-0201	1000 Series double euro profile cylinder, key + key, 80=30mm+50mm, Polished Brass, Blister	PC	PB	BRASS	BLIST	310
10-1002-3050-00-2201	1000 Series double euro profile cylinder, key + key, 80=30mm+50mm, Satin Nickel, Blister	PC	SN	BRASS	BLIST	310
10-1002-3535-00-0201	1000 Series double euro profile cylinder, key + key, 70=35mm+35mm, Polished Brass, Blister	PC	PB	BRASS	BLIST	290
10-1002-3535-00-2201	1000 Series double euro profile cylinder, key + key, 70=35mm+35mm, Satin Nickel, Blister	PC	SN	BRASS	BLIST	290
10-1002-3540-00-0201	1000 Series double euro profile cylinder, key + key, 75=35mm+40mm, Polished Brass, Blister	PC	PB	BRASS	BLIST	300
10-1002-3540-00-2201	1000 Series double euro profile cylinder, key + key, 75=35mm+40mm, Satin Nickel, Blister	PC	SN	BRASS	BLIST	300
10-1002-3137-00-0201	1000 Series double euro profile cylinder, key + key, 68=31mm+37mm, Polished Brass, Blister	PC	PB	BRASS	BLIST	310
10-1002-3137-00-2201	1000 Series double euro profile cylinder, key + key, 68=31mm+37mm, Satin Nickel, Blister	PC	SN	BRASS	BLIST	310
10-1002-3545-00-0201	1000 Series double euro profile cylinder, key + key, 80=35mm+45mm, Polished Brass, Blister	PC	PB	BRASS	BLIST	310
10-1002-3545-00-2201	1000 Series double euro profile cylinder, key + key, 80=35mm+45mm, Satin Nickel, Blister	PC	SN	BRASS	BLIST	310
10-1002-3550-00-0201	1000 Series double euro profile cylinder, key + key, 85=35mm+50mm, Polished Brass, Blister	PC	PB	BRASS	BLIST	320

Double Euro Profile Cylinders

1000 Series

KEY + KEY

SKU	DESCRIPTION	UOM	FIN	MAT	PKG	WGT
10-1002-3550-00-2201	1000 Series double euro profile cylinder, key + key, 85=35mm+50mm, Satin Nickel, Blister	PC	SN	BRASS	BLIST	320
10-1002-4040-00-0201	1000 Series double euro profile cylinder, key + key, 80=40mm+40mm, Polished Brass, Blister	PC	PB	BRASS	BLIST	310
10-1002-4040-00-2201	1000 Series double euro profile cylinder, key + key, 80=40mm+40mm, Satin Nickel, Blister	PC	SN	BRASS	BLIST	310
10-1002-4045-00-0201	1000 Series double euro profile cylinder, key + key, 85=40mm+45mm, Polished Brass, Blister	PC	PB	BRASS	BLIST	320
10-1002-4045-00-2201	1000 Series double euro profile cylinder, key + key, 85=40mm+45mm, Satin Nickel, Blister	PC	SN	BRASS	BLIST	320
10-1002-4050-00-0201	1000 Series double euro profile cylinder, key + key, 90=40mm+50mm, Polished Brass, Blister	PC	PB	BRASS	BLIST	330
10-1002-4050-00-2201	1000 Series double euro profile cylinder, key + key, 90=40mm+50mm, Satin Nickel, Blister	PC	SN	BRASS	BLIST	330
10-1002-4545-00-0201	1000 Series double euro profile cylinder, key + key, 90=45mm+45mm, Polished Brass, Blister	PC	PB	BRASS	BLIST	330
10-1002-4545-00-2201	1000 Series double euro profile cylinder, key + key, 90=45mm+45mm, Satin Nickel, Blister	PC	SN	BRASS	BLIST	330
10-1002-4550-00-0201	1000 Series double euro profile cylinder, key + key, 95=45mm+50mm, Polished Brass, Blister	PC	PB	BRASS	BLIST	340
10-1002-4550-00-2201	1000 Series double euro profile cylinder, key + key, 95=45mm+50mm, Satin Nickel, Blister	PC	SN	BRASS	BLIST	340
10-1002-5050-00-0201	1000 Series double euro profile cylinder, key + key, 100=50mm+50mm, Polished Brass, Blister	PC	PB	BRASS	BLIST	350
10-1002-5050-00-2201	1000 Series double euro profile cylinder, key + key, 100=50mm+50mm, Satin Nickel, Blister	PC	SN	BRASS	BLIST	350
10-1002-2727-00-0211	1000 Series double euro profile cylinder, key + key, 54=27mm+27mm, Polished Brass, Box	PC	PB	BRASS	BOX	250
10-1002-2727-00-2211	1000 Series double euro profile cylinder, key + key, 54=27mm+27mm, Satin Nickel, Box	PC	SN	BRASS	BOX	250
10-1002-2730-00-0211	1000 Series double euro profile cylinder, key + key, 57=27mm+30mm, Polished Brass, Box	PC	PB	BRASS	BOX	260
10-1002-2730-00-2211	1000 Series double euro profile cylinder, key + key, 57=27mm+30mm, Satin Nickel, Box	PC	SN	BRASS	BOX	260
10-1002-2735-00-0211	1000 Series double euro profile cylinder, key + key, 62=27mm+35mm, Polished Brass, Box	PC	PB	BRASS	BOX	275
10-1002-2735-00-2211	1000 Series double euro profile cylinder, key + key, 62=27mm+35mm, Satin Nickel, Box	PC	SN	BRASS	BOX	275
10-1002-3030-00-0211	1000 Series double euro profile cylinder, key + key, 60=30mm+30mm, Polished Brass, Box	PC	PB	BRASS	BOX	270
10-1002-3030-00-2211	1000 Series double euro profile cylinder, key + key, 60=30mm+30mm, Satin Nickel, Box	PC	SN	BRASS	BOX	270
10-1002-3035-00-0211	1000 Series double euro profile cylinder, key + key, 65=30mm+35mm, Polished Brass, Box	PC	PB	BRASS	BOX	280
10-1002-3035-00-2211	1000 Series double euro profile cylinder, key + key, 65=30mm+35mm, Satin Nickel, Box	PC	SN	BRASS	BOX	280
10-1002-3040-00-0211	1000 Series double euro profile cylinder, key + key, 70=30mm+40mm, Polished Brass, Box	PC	PB	BRASS	BOX	290
10-1002-3040-00-2211	1000 Series double euro profile cylinder, key + key, 70=30mm+40mm, Satin Nickel, Box	PC	SN	BRASS	BOX	290

Double Euro Profile Cylinders

1000 Series

KEY + KEY

SKU	DESCRIPTION	UOM	FIN	MAT	PKG	WGT
10-1002-3045-00-0211	1000 Series double euro profile cylinder, key + key, 75=30mm+45mm, Polished Brass, Box	PC	PB	BRASS	BOX	300
10-1002-3045-00-2211	1000 Series double euro profile cylinder, key + key, 75=30mm+45mm, Satin Nickel, Box	PC	SN	BRASS	BOX	300
10-1002-3050-00-0211	1000 Series double euro profile cylinder, key + key, 80=30mm+50mm, Polished Brass, Box	PC	PB	BRASS	BOX	310
10-1002-3050-00-2211	1000 Series double euro profile cylinder, key + key, 80=30mm+50mm, Satin Nickel, Box	PC	SN	BRASS	BOX	310
10-1002-3535-00-0211	1000 Series double euro profile cylinder, key + key, 70=35mm+35mm, Polished Brass, Box	PC	PB	BRASS	BOX	290
10-1002-3535-00-2211	1000 Series double euro profile cylinder, key + key, 70=35mm+35mm, Satin Nickel, Box	PC	SN	BRASS	BOX	290
10-1002-3540-00-0211	1000 Series double euro profile cylinder, key + key, 75=35mm+40mm, Polished Brass, Box	PC	PB	BRASS	BOX	300
10-1002-3540-00-2211	1000 Series double euro profile cylinder, key + key, 75=35mm+40mm, Satin Nickel, Box	PC	SN	BRASS	BOX	300
10-1002-3137-00-0211	1000 Series double euro profile cylinder, key + key, 68=31mm+37mm, Polished Brass, Box	PC	PB	BRASS	BOX	310
10-1002-3137-00-2211	1000 Series double euro profile cylinder, key + key, 68=31mm+37mm, Satin Nickel, Box	PC	SN	BRASS	BOX	310
10-1002-3545-00-0211	1000 Series double euro profile cylinder, key + key, 80=35mm+45mm, Polished Brass, Box	PC	PB	BRASS	BOX	310
10-1002-3545-00-2211	1000 Series double euro profile cylinder, key + key, 80=35mm+45mm, Satin Nickel, Box	PC	SN	BRASS	BOX	310
10-1002-3550-00-0211	1000 Series double euro profile cylinder, key + key, 85=35mm+50mm, Polished Brass, Box	PC	PB	BRASS	BOX	320
10-1002-3550-00-2211	1000 Series double euro profile cylinder, key + key, 85=35mm+50mm, Satin Nickel, Box	PC	SN	BRASS	BOX	320
10-1002-4040-00-0211	1000 Series double euro profile cylinder, key + key, 80=40mm+40mm, Polished Brass, Box	PC	PB	BRASS	BOX	310
10-1002-4040-00-2211	1000 Series double euro profile cylinder, key + key, 80=40mm+40mm, Satin Nickel, Box	PC	SN	BRASS	BOX	310
10-1002-4045-00-0211	1000 Series double euro profile cylinder, key + key, 85=40mm+45mm, Polished Brass, Box	PC	PB	BRASS	BOX	320
10-1002-4045-00-2211	1000 Series double euro profile cylinder, key + key, 85=40mm+45mm, Satin Nickel, Box	PC	SN	BRASS	BOX	320
10-1002-4050-00-0211	1000 Series double euro profile cylinder, key + key, 90=40mm+50mm, Polished Brass, Box	PC	PB	BRASS	BOX	330
10-1002-4050-00-2211	1000 Series double euro profile cylinder, key + key, 90=40mm+50mm, Satin Nickel, Box	PC	SN	BRASS	BOX	330
10-1002-4545-00-0211	1000 Series double euro profile cylinder, key + key, 90=45mm+45mm, Polished Brass, Box	PC	PB	BRASS	BOX	330
10-1002-4545-00-2211	1000 Series double euro profile cylinder, key + key, 90=45mm+45mm, Satin Nickel, Box	PC	SN	BRASS	BOX	330
10-1002-4550-00-0211	1000 Series double euro profile cylinder, key + key, 95=45mm+50mm, Polished Brass, Box	PC	PB	BRASS	BOX	340
10-1002-4550-00-2211	1000 Series double euro profile cylinder, key + key, 95=45mm+50mm, Satin Nickel, Box	PC	SN	BRASS	BOX	340
10-1002-5050-00-0211	1000 Series double euro profile cylinder, key + key, 100=50mm+50mm, Polished Brass, Box	PC	PB	BRASS	BOX	350

Double Euro Profile Cylinders
1000 Series

KEY + KEY

SKU	DESCRIPTION	UOM	FIN	MAT	PKG	WGT
10-1002-5050-00-2211	1000 Series double euro profile cylinder, key + key, 100=50mm+50mm, Satin Nickel, Box	PC	SN	BRASS	BOX	350
10-1002-3040-00-0901	1000 Series double euro profile cylinder, key + key, 70=30mm+40mm, Antique Brass, Blister	PC	AB	BRASS	BOX	270
10-1002-3535-00-0901	1000 Series double euro profile cylinder, key + key, 70=35mm+35mm, Antique Brass, Blister	PC	AB	BRASS	BOX	290
10-1002-4040-00-0901	1000 Series double euro profile cylinder, key + key, 80=40mm+40mm, Antique Brass, Blister	PC	AB	BRASS	BOX	310

KEY + KNOB

10-1003-3030-CK-0201	1000 Series double euro profile cylinder, key + knob, 60=30mm+30mm, Polished Brass, Blister	PC	PB	BRASS	BLIST	285
10-1003-3030-CK-2201	1000 Series double euro profile cylinder, key + knob, 60=30mm+30mm, Satin Nickel, Blister	PC	SN	BRASS	BLIST	285
10-1003-3035-CK-0201	1000 Series double euro profile cylinder, key + knob, 65=30mm+35mm, Polished Brass, Blister	PC	PB	BRASS	BLIST	300
10-1003-3035-CK-2201	1000 Series double euro profile cylinder, key + knob, 65=30mm+35mm, Satin Nickel, Blister	PC	SN	BRASS	BLIST	300
10-1003-3040-CK-0201	1000 Series double euro profile cylinder, key + knob, 70=30mm+40mm, Polished Brass, Blister	PC	PB	BRASS	BLIST	315
10-1003-3040-CK-2201	1000 Series double euro profile cylinder, key + knob, 70=30mm+40mm, Satin Nickel, Blister	PC	SN	BRASS	BLIST	315
10-1003-3045-CK-0201	1000 Series double euro profile cylinder, key + knob, 75=30mm+45mm, Polished Brass, Blister	PC	PB	BRASS	BLIST	330
10-1003-3045-CK-2201	1000 Series double euro profile cylinder, key + knob, 75=30mm+45mm, Satin Nickel, Blister	PC	SN	BRASS	BLIST	330
10-1003-3137-CK-0201	1000 Series double euro profile cylinder, key + knob, 68=31mm+37mm, Polished Brass, Blister	PC	PB	BRASS	BLIST	310
10-1003-3137-CK-2201	1000 Series double euro profile cylinder, key + knob, 68=31mm+37mm, Satin Nickel, Blister	PC	SN	BRASS	BLIST	310
10-1003-3535-CK-0201	1000 Series double euro profile cylinder, key + knob, 70=35mm+35mm, Polished Brass, Blister	PC	PB	BRASS	BLIST	315
10-1003-3535-CK-2201	1000 Series double euro profile cylinder, key + knob, 70=35mm+35mm, Satin Nickel, Blister	PC	SN	BRASS	BLIST	315
10-1003-3540-CK-0201	1000 Series double euro profile cylinder, key + knob, 75=35mm+40mm, Polished Brass, Blister	PC	PB	BRASS	BLIST	330
10-1003-3540-CK-2201	1000 Series double euro profile cylinder, key + knob, 75=35mm+40mm, Satin Nickel, Blister	PC	SN	BRASS	BLIST	330
10-1003-3545-CK-0201	1000 Series double euro profile cylinder, key + knob, 80=35mm+45mm, Polished Brass, Blister	PC	PB	BRASS	BLIST	345
10-1003-3545-CK-2201	1000 Series double euro profile cylinder, key + knob, 80=35mm+45mm, Satin Nickel, Blister	PC	SN	BRASS	BLIST	345
10-1003-3550-CK-0201	1000 Series double euro profile cylinder, key + knob, 85=35mm+50mm, Polished Brass, Blister	PC	PB	BRASS	BLIST	360
10-1003-3550-CK-2201	1000 Series double euro profile cylinder, key + knob, 85=35mm+50mm, Satin Nickel, Blister	PC	SN	BRASS	BLIST	360
10-1003-4040-CK-0201	1000 Series double euro profile cylinder, key + knob, 80=40mm+40mm, Polished Brass, Blister	PC	PB	BRASS	BLIST	345
10-1003-4040-CK-2201	1000 Series double euro profile cylinder, key + knob, 80=40mm+40mm, Satin Nickel, Blister	PC	SN	BRASS	BLIST	345

Double Euro Profile Cylinders

1000 Series

KEY + KNOB

SKU	DESCRIPTION	UOM	FIN	MAT	PKG	WGT
10-1003-4045-CK-0201	1000 Series double euro profile cylinder, key + knob, 85=40mm+45mm, Polished Brass, Blister	PC	PB	BRASS	BLIST	360
10-1003-4045-CK-2201	1000 Series double euro profile cylinder, key + knob, 85=40mm+45mm, Satin Nickel, Blister	PC	SN	BRASS	BLIST	360
10-1003-4050-CK-0201	1000 Series double euro profile cylinder, key + knob, 90=40mm+50mm, Polished Brass, Blister	PC	PB	BRASS	BLIST	375
10-1003-4050-CK-2201	1000 Series double euro profile cylinder, key + knob, 90=40mm+50mm, Satin Nickel, Blister	PC	SN	BRASS	BLIST	375
10-1003-4545-CK-0201	1000 Series double euro profile cylinder, key + knob, 90=45mm+45mm, Polished Brass, Blister	PC	PB	BRASS	BLIST	375
10-1003-4545-CK-2201	1000 Series double euro profile cylinder, key + knob, 90=45mm+45mm, Satin Nickel, Blister	PC	SN	BRASS	BLIST	375
10-1003-4550-CK-0201	1000 Series double euro profile cylinder, key + knob, 95=45mm+50mm, Polished Brass, Blister	PC	PB	BRASS	BLIST	390
10-1003-4550-CK-2201	1000 Series double euro profile cylinder, key + knob, 95=45mm+50mm, Satin Nickel, Blister	PC	SN	BRASS	BLIST	390
10-1003-5050-CK-0201	1000 Series double euro profile cylinder, key + knob, 100=50mm+50mm, Polished Brass, Blister	PC	PB	BRASS	BLIST	405
10-1003-5050-CK-2201	1000 Series double euro profile cylinder, key + knob, 100=50mm+50mm, Satin Nickel, Blister	PC	SN	BRASS	BLIST	405
10-1003-3030-CK-0211	1000 Series double euro profile cylinder, key + knob, 60=30mm+30mm, Polished Brass, Box	PC	PB	BRASS	BOX	285
10-1003-3030-CK-2211	1000 Series double euro profile cylinder, key + knob, 60=30mm+30mm, Satin Nickel, Box	PC	SN	BRASS	BOX	285
10-1003-3035-CK-0211	1000 Series double euro profile cylinder, key + knob, 65=30mm+35mm, Polished Brass, Box	PC	PB	BRASS	BOX	300
10-1003-3035-CK-2211	1000 Series double euro profile cylinder, key + knob, 65=30mm+35mm, Satin Nickel, Box	PC	SN	BRASS	BOX	300
10-1003-3040-CK-0211	1000 Series double euro profile cylinder, key + knob, 70=30mm+40mm, Polished Brass, Box	PC	PB	BRASS	BOX	315
10-1003-3040-CK-2211	1000 Series double euro profile cylinder, key + knob, 70=30mm+40mm, Satin Nickel, Box	PC	SN	BRASS	BOX	315
10-1003-3045-CK-0211	1000 Series double euro profile cylinder, key + knob, 75=30mm+45mm, Polished Brass, Box	PC	PB	BRASS	BOX	330
10-1003-3045-CK-2211	1000 Series double euro profile cylinder, key + knob, 75=30mm+45mm, Satin Nickel, Box	PC	SN	BRASS	BOX	330
10-1003-3137-CK-0211	1000 Series double euro profile cylinder, key + knob, 68=31mm+37mm, Polished Brass, Box	PC	PB	BRASS	BOX	310
10-1003-3137-CK-2211	1000 Series double euro profile cylinder, key + knob, 68=31mm+37mm, Satin Nickel, Box	PC	SN	BRASS	BOX	310
10-1003-3535-CK-0211	1000 Series double euro profile cylinder, key + knob, 70=35mm+35mm, Polished Brass, Box	PC	PB	BRASS	BOX	315
10-1003-3535-CK-2211	1000 Series double euro profile cylinder, key + knob, 70=35mm+35mm, Satin Nickel, Box	PC	SN	BRASS	BOX	315
10-1003-3540-CK-0211	1000 Series double euro profile cylinder, key + knob, 75=35mm+40mm, Polished Brass, Box	PC	PB	BRASS	BOX	330
10-1003-3540-CK-2211	1000 Series double euro profile cylinder, key + knob, 75=35mm+40mm, Satin Nickel, Box	PC	SN	BRASS	BOX	330
10-1003-3545-CK-0211	1000 Series double euro profile cylinder, key + knob, 80=35mm+45mm, Polished Brass, Box	PC	PB	BRASS	BOX	345

Double Euro Profile Cylinders
1000 Series

KEY + KNOB

SKU	DESCRIPTION	UOM	FIN	MAT	PKG	WGT
10-1003-3545-CK-2211	1000 Series double euro profile cylinder, key + knob, 80=35mm+45mm, Satin Nickel, Box	PC	SN	BRASS	BOX	345
10-1003-3550-CK-0211	1000 Series double euro profile cylinder, key + knob, 85=35mm+50mm, Polished Brass, Box	PC	PB	BRASS	BOX	360
10-1003-3550-CK-2211	1000 Series double euro profile cylinder, key + knob, 85=35mm+50mm, Satin Nickel, Box	PC	SN	BRASS	BOX	360
10-1003-4040-CK-0211	1000 Series double euro profile cylinder, key + knob, 80=40mm+40mm, Polished Brass, Box	PC	PB	BRASS	BOX	345
10-1003-4040-CK-2211	1000 Series double euro profile cylinder, key + knob, 80=40mm+40mm, Satin Nickel, Box	PC	SN	BRASS	BOX	345
10-1003-4045-CK-0211	1000 Series double euro profile cylinder, key + knob, 85=40mm+45mm, Polished Brass, Box	PC	PB	BRASS	BOX	360
10-1003-4045-CK-2211	1000 Series double euro profile cylinder, key + knob, 85=40mm+45mm, Satin Nickel, Box	PC	SN	BRASS	BOX	360
10-1003-4050-CK-0211	1000 Series double euro profile cylinder, key + knob, 90=40mm+50mm, Polished Brass, Box	PC	PB	BRASS	BOX	375
10-1003-4050-CK-2211	1000 Series double euro profile cylinder, key + knob, 90=40mm+50mm, Satin Nickel, Box	PC	SN	BRASS	BOX	375
10-1003-4545-CK-0211	1000 Series double euro profile cylinder, key + knob, 90=45mm+45mm, Polished Brass, Box	PC	PB	BRASS	BOX	375
10-1003-4545-CK-2211	1000 Series double euro profile cylinder, key + knob, 90=45mm+45mm, Satin Nickel, Box	PC	SN	BRASS	BOX	375
10-1003-4550-CK-0211	1000 Series double euro profile cylinder, key + knob, 95=45mm+50mm, Polished Brass, Box	PC	PB	BRASS	BOX	390
10-1003-4550-CK-2211	1000 Series double euro profile cylinder, key + knob, 95=45mm+50mm, Satin Nickel, Box	PC	SN	BRASS	BOX	390
10-1003-5050-CK-0211	1000 Series double euro profile cylinder, key + knob, 100=50mm+50mm, Polished Brass, Box	PC	PB	BRASS	BOX	405
10-1003-5050-CK-2211	1000 Series double euro profile cylinder, key + knob, 100=50mm+50mm, Satin Nickel, Box	PC	SN	BRASS	BOX	405
10-1003-3030-CK-0901	1000 Series double euro profile cylinder, key + knob, 60=30mm+30mm, Antique Brass, Blister	PC	AB	BRASS	BOX	285
10-1003-3040-CK-0901	1000 Series double euro profile cylinder, key + knob, 70=30mm+40mm, Antique Brass, Blister	PC	AB	BRASS	BOX	315
10-1003-3040-KC-0901	1000 Series double euro profile cylinder, key + knob, 70=30mm+40mm, Antique Brass, Blister	PC	AB	BRASS	BOX	315

Single Euro Profile Cylinders
1000 Series

KEY

10-1001-0030-00-0201	1000 Series single euro profile cylinder, one side key, 30=00mm+30mm, Polished Brass, Blister	PC	PB	BRASS	BLIST	155
10-1001-0030-00-2201	1000 Series single euro profile cylinder, one side key, 30=00mm+30mm, Satin Nickel, Blister	PC	SN	BRASS	BLIST	155
10-1001-0035-00-0201	1000 Series single euro profile cylinder, one side key, 35=00mm+35mm, Polished Brass, Blister	PC	PB	BRASS	BLIST	165
10-1001-0035-00-2201	1000 Series single euro profile cylinder, one side key, 35=00mm+35mm, Satin Nickel, Blister	PC	SN	BRASS	BLIST	165

Single Euro Profile Cylinders

1000 Series

KEY

SKU	DESCRIPTION	UOM	FIN	MAT	PKG	WGT
10-1001-0040-00-0201	1000 Series single euro profile cylinder, one side key, 40=00mm+40mm, Polished Brass, Blister	PC	PB	BRASS	BLIST	175
10-1001-0040-00-2201	1000 Series single euro profile cylinder, one side key, 40=00mm+40mm, Satin Nickel, Blister	PC	SN	BRASS	BLIST	175
10-1001-0045-00-0201	1000 Series single euro profile cylinder, one side key, 45=00mm+45mm, Polished Brass, Blister	PC	PB	BRASS	BLIST	185
10-1001-0045-00-2201	1000 Series single euro profile cylinder, one side key, 45=00mm+45mm, Satin Nickel, Blister	PC	SN	BRASS	BLIST	185
10-1001-0050-00-0201	1000 Series single euro profile cylinder, one side key, 50=00mm+50mm, Polished Brass, Blister	PC	PB	BRASS	BLIST	195
10-1001-0050-00-2201	1000 Series single euro profile cylinder, one side key, 50=00mm+50mm, Satin Nickel, Blister	PC	SN	BRASS	BLIST	195
10-1001-0030-00-0211	1000 Series single euro profile cylinder, one side key, 30=00mm+30mm, Polished Brass, Box	PC	PB	BRASS	BOX	155
10-1001-0030-00-2211	1000 Series single euro profile cylinder, one side key, 30=00mm+30mm, Satin Nickel, Box	PC	SN	BRASS	BOX	155
10-1001-0035-00-0211	1000 Series single euro profile cylinder, one side key, 35=00mm+35mm, Polished Brass, Box	PC	PB	BRASS	BOX	165
10-1001-0035-00-2211	1000 Series single euro profile cylinder, one side key, 35=00mm+35mm, Satin Nickel, Box	PC	SN	BRASS	BOX	165
10-1001-0040-00-0211	1000 Series single euro profile cylinder, one side key, 40=00mm+40mm, Polished Brass, Box	PC	PB	BRASS	BOX	175
10-1001-0040-00-2211	1000 Series single euro profile cylinder, one side key, 40=00mm+40mm, Satin Nickel, Box	PC	SN	BRASS	BOX	175
10-1001-0045-00-0211	1000 Series single euro profile cylinder, one side key, 45=00mm+45mm, Polished Brass, Box	PC	PB	BRASS	BOX	185
10-1001-0045-00-2211	1000 Series single euro profile cylinder, one side key, 45=00mm+45mm, Satin Nickel, Box	PC	SN	BRASS	BOX	185
10-1001-0050-00-0211	1000 Series single euro profile cylinder, one side key, 50=00mm+50mm, Polished Brass, Box	PC	PB	BRASS	BOX	195
10-1001-0050-00-2211	1000 Series single euro profile cylinder, one side key, 50=00mm+50mm, Satin Nickel, Box	PC	SN	BRASS	BOX	195

Double Euro Profile Cylinders
500 Series

Specifications:
- Double euro profile cylinder - Key + Key, Key + Knob, Knob
- Single euro profile cylinder - One side key
- Standard security
- Brass Material
- Tested to EN1303:2005
- Size available from 54mm-100mm
- Finish available - Satin Nickel, Polish Brass, Polish Chrome, Antique Brass
- Type: Entrance, Bedroom, Bathroom function

Key Highlights:
- Regular key
- 5 pins
- Supplied with 3 keys

PATENTED REGULAR 5 PIN 3 ANTI-PICK

Double Euro Profile

Double Euro Profile with Knob

Double Euro Profile with Privacy Function

Single Profile

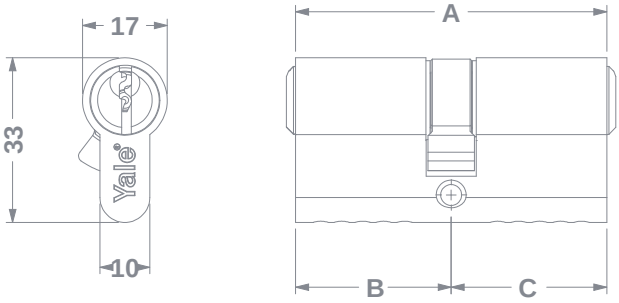

Double Euro Profile Cylinders
500 Series

KEY + KEY

SKU	DESCRIPTION	UOM	FIN	MAT	PKG	WGT
10-0502-2727-00-0201	500 Series double euro profile cylinder, key + key, 54=27mm+27mm, Polished Brass, Blister	PC	PB	BRASS	BILIST	177
10-0502-2727-00-2201	500 Series double euro profile cylinder, key + key, 54=27mm+27mm, Satin Nickel, Blister	PC	SN	BRASS	BILIST	177
10-0502-2730-00-0201	500 Series double euro profile cylinder, key + key, 57=27mm+30mm, Polished Brass, Blister	PC	PB	BRASS	BILIST	190
10-0502-2730-00-2201	500 Series double euro profile cylinder, key + key, 57=27mm+30mm, Satin Nickel, Blister	PC	SN	BRASS	BILIST	190
10-0502-2735-00-0201	500 Series double euro profile cylinder, key + key, 62=27mm+35mm, Polished Brass, Blister	PC	PB	BRASS	BILIST	200
10-0502-2735-00-2201	500 Series double euro profile cylinder, key + key, 62=27mm+35mm, Satin Nickel, Blister	PC	SN	BRASS	BILIST	200
10-0502-3030-00-0201	500 Series double euro profile cylinder, key + key, 60=30mm+30mm, Polished Brass, Blister	PC	PB	BRASS	BILIST	220
10-0502-3030-00-2201	500 Series double euro profile cylinder, key + key, 60=30mm+30mm, Satin Nickel, Blister	PC	SN	BRASS	BILIST	220
10-0502-3035-00-0201	500 Series double euro profile cylinder, key + key, 65=30mm+35mm, Polished Brass, Blister	PC	PB	BRASS	BILIST	235
10-0502-3035-00-2201	500 Series double euro profile cylinder, key + key, 65=30mm+35mm, Satin Nickel, Blister	PC	SN	BRASS	BILIST	235
10-0502-3040-00-0201	500 Series double euro profile cylinder, key + key, 70=30mm+40mm, Polished Brass, Blister	PC	PB	BRASS	BILIST	250
10-0502-3040-00-2201	500 Series double euro profile cylinder, key + key, 70=30mm+40mm, Satin Nickel, Blister	PC	SN	BRASS	BILIST	250
10-0502-3045-00-0201	500 Series double euro profile cylinder, key + key, 75=30mm+45mm, Polished Brass, Blister	PC	PB	BRASS	BILIST	265
10-0502-3045-00-2201	500 Series double euro profile cylinder, key + key, 75=30mm+45mm, Satin Nickel, Blister	PC	SN	BRASS	BILIST	265
10-0502-3050-00-0201	500 Series double euro profile cylinder, key + key, 80=30mm+50mm, Polished Brass, Blister	PC	PB	BRASS	BILIST	275
10-0502-3050-00-2201	500 Series double euro profile cylinder, key + key, 80=30mm+50mm, Satin Nickel, Blister	PC	SN	BRASS	BILIST	275
10-0502-3535-00-0201	500 Series double euro profile cylinder, key + key, 70=35mm+35mm, Polished Brass, Blister	PC	PB	BRASS	BILIST	250
10-0502-3535-00-2201	500 Series double euro profile cylinder, key + key, 70=35mm+35mm, Satin Nickel, Blister	PC	SN	BRASS	BILIST	250
10-0502-3540-00-0201	500 Series double euro profile cylinder, key + key, 75=35mm+40mm, Polished Brass, Blister	PC	PB	BRASS	BILIST	265
10-0502-3540-00-2201	500 Series double euro profile cylinder, key + key, 75=35mm+40mm, Satin Nickel, Blister	PC	SN	BRASS	BILIST	265
10-0502-3137-00-0201	500 Series double euro profile cylinder, key + key, 68=31mm+37mm, Polished Brass, Blister	PC	PB	BRASS	BILIST	245
10-0502-3137-00-2201	500 Series double euro profile cylinder, key + key, 68=31mm+37mm, Satin Nickel, Blister	PC	SN	BRASS	BILIST	245
10-0502-3545-00-0201	500 Series double euro profile cylinder, key + key, 80=35mm+45mm, Polished Brass, Blister	PC	PB	BRASS	BILIST	275
10-0502-3545-00-2201	500 Series double euro profile cylinder, key + key, 80=35mm+45mm, Satin Nickel, Blister	PC	SN	BRASS	BILIST	275
10-0502-3550-00-0201	500 Series double euro profile cylinder, key + key, 85=35mm+50mm, Polished Brass, Blister	PC	PB	BRASS	BILIST	285

Double Euro Profile Cylinders

500 Series

KEY + KEY

SKU	DESCRIPTION	UOM	FIN	MAT	PKG	WGT
10-0502-3550-00-2201	500 Series double euro profile cylinder, key + key, 85=35mm+50mm, Satin Nickel, Blister	PC	SN	BRASS	BILIST	285
10-0502-4040-00-0201	500 Series double euro profile cylinder, key + key, 80=40mm+40mm, Polished Brass, Blister	PC	PB	BRASS	BILIST	275
10-0502-4040-00-2201	500 Series double euro profile cylinder, key + key, 80=40mm+40mm, Satin Nickel, Blister	PC	SN	BRASS	BILIST	275
10-0502-4045-00-0201	500 Series double euro profile cylinder, key + key, 85=40mm+45mm, Polished Brass, Blister	PC	PB	BRASS	BILIST	285
10-0502-4045-00-2201	500 Series double euro profile cylinder, key + key, 85=40mm+45mm, Satin Nickel, Blister	PC	SN	BRASS	BILIST	285
10-0502-4050-00-0201	500 Series double euro profile cylinder, key + key, 90=40mm+50mm, Polished Brass, Blister	PC	PB	BRASS	BILIST	295
10-0502-4050-00-2201	500 Series double euro profile cylinder, key + key, 90=40mm+50mm, Satin Nickel, Blister	PC	SN	BRASS	BILIST	295
10-0502-4545-00-0201	500 Series double euro profile cylinder, key + key, 90=45mm+45mm, Polished Brass, Blister	PC	PB	BRASS	BILIST	295
10-0502-4545-00-2201	500 Series double euro profile cylinder, key + key, 90=45mm+45mm, Satin Nickel, Blister	PC	SN	BRASS	BILIST	295
10-0502-4550-00-0201	500 Series double euro profile cylinder, key + key, 95=45mm+50mm, Polished Brass, Blister	PC	PB	BRASS	BILIST	305
10-0502-4550-00-2201	500 Series double euro profile cylinder, key + key, 95=45mm+50mm, Satin Nickel, Blister	PC	SN	BRASS	BILIST	305
10-0502-5050-00-0201	500 Series double euro profile cylinder, key + key, 100=50mm+50mm, Polished Brass, Blister	PC	PB	BRASS	BILIST	315
10-0502-5050-00-2201	500 Series double euro profile cylinder, key + key, 100=50mm+50mm, Satin Nickel, Blister	PC	SN	BRASS	BILIST	315
10-0502-2727-00-0211	500 Series double euro profile cylinder, key + key, 54=27mm+27mm, Polished Brass, Box	PC	PB	BRASS	BOX	177
10-0502-2727-00-2211	500 Series double euro profile cylinder, key + key, 54=27mm+27mm, Satin Nickel, Box	PC	SN	BRASS	BOX	177
10-0502-2730-00-0211	500 Series double euro profile cylinder, key + key, 57=27mm+30mm, Polished Brass, Box	PC	PB	BRASS	BOX	190
10-0502-2730-00-2211	500 Series double euro profile cylinder, key + key, 57=27mm+30mm, Satin Nickel, Box	PC	SN	BRASS	BOX	190
10-0502-2735-00-0211	500 Series double euro profile cylinder, key + key, 62=27mm+35mm, Polished Brass, Box	PC	PB	BRASS	BOX	200
10-0502-2735-00-2211	500 Series double euro profile cylinder, key + key, 62=27mm+35mm, Satin Nickel, Box	PC	SN	BRASS	BOX	200
10-0502-3030-00-0211	500 Series double euro profile cylinder, key + key, 60=30mm+30mm, Polished Brass, Box	PC	PB	BRASS	BOX	220
10-0502-3030-00-2211	500 Series double euro profile cylinder, key + key, 60=30mm+30mm, Satin Nickel, Box	PC	SN	BRASS	BOX	220
10-0502-3035-00-0211	500 Series double euro profile cylinder, key + key, 65=30mm+35mm, Polished Brass, Box	PC	PB	BRASS	BOX	235
10-0502-3035-00-2211	500 Series double euro profile cylinder, key + key, 65=30mm+35mm, Satin Nickel, Box	PC	SN	BRASS	BOX	235
10-0502-3040-00-0211	500 Series double euro profile cylinder, key + key, 70=30mm+40mm, Polished Brass, Box	PC	PB	BRASS	BOX	250
10-0502-3040-00-2211	500 Series double euro profile cylinder, key + key, 70=30mm+40mm, Satin Nickel, Box	PC	SN	BRASS	BOX	250

Double Euro Profile Cylinders

500 Series

KEY + KEY

SKU	DESCRIPTION	UOM	FIN	MAT	PKG	WGT
10-0502-3045-00-0211	500 Series double euro profile cylinder, key + key, 75=30mm+45mm, Polished Brass, Box	PC	PB	BRASS	BOX	265
10-0502-3045-00-2211	500 Series double euro profile cylinder, key + key, 75=30mm+45mm, Satin Nickel, Box	PC	SN	BRASS	BOX	265
10-0502-3050-00-0211	500 Series double euro profile cylinder, key + key, 80=30mm+50mm, Polished Brass, Box	PC	PB	BRASS	BOX	275
10-0502-3050-00-2211	500 Series double euro profile cylinder, key + key, 80=30mm+50mm, Satin Nickel, Box	PC	SN	BRASS	BOX	275
10-0502-3535-00-0211	500 Series double euro profile cylinder, key + key, 70=35mm+35mm, Polished Brass, Box	PC	PB	BRASS	BOX	250
10-0502-3535-00-2211	500 Series double euro profile cylinder, key + key, 70=35mm+35mm, Satin Nickel, Box	PC	SN	BRASS	BOX	250
10-0502-3540-00-0211	500 Series double euro profile cylinder, key + key, 75=35mm+40mm, Polished Brass, Box	PC	PB	BRASS	BOX	265
10-0502-3540-00-2211	500 Series double euro profile cylinder, key + key, 75=35mm+40mm, Satin Nickel, Box	PC	SN	BRASS	BOX	265
10-0502-3137-00-0211	500 Series double euro profile cylinder, key + key, 68=31mm+37mm, Polished Brass, Box	PC	PB	BRASS	BOX	245
10-0502-3137-00-2211	500 Series double euro profile cylinder, key + key, 68=31mm+37mm, Satin Nickel, Box	PC	SN	BRASS	BOX	245
10-0502-3545-00-0211	500 Series double euro profile cylinder, key + key, 80=35mm+45mm, Polished Brass, Box	PC	PB	BRASS	BOX	275
10-0502-3545-00-2211	500 Series double euro profile cylinder, key + key, 80=35mm+45mm, Satin Nickel, Box	PC	SN	BRASS	BOX	275
10-0502-3550-00-0211	500 Series double euro profile cylinder, key + key, 85=35mm+50mm, Polished Brass, Box	PC	PB	BRASS	BOX	285
10-0502-3550-00-2211	500 Series double euro profile cylinder, key + key, 85=35mm+50mm, Satin Nickel, Box	PC	SN	BRASS	BOX	285
10-0502-4040-00-0211	500 Series double euro profile cylinder, key + key, 80=40mm+40mm, Polished Brass, Box	PC	PB	BRASS	BOX	275
10-0502-4040-00-2211	500 Series double euro profile cylinder, key + key, 80=40mm+40mm, Satin Nickel, Box	PC	SN	BRASS	BOX	275
10-0502-4045-00-0211	500 Series double euro profile cylinder, key + key, 85=40mm+45mm, Polished Brass, Box	PC	PB	BRASS	BOX	285
10-0502-4045-00-2211	500 Series double euro profile cylinder, key + key, 85=40mm+45mm, Satin Nickel, Box	PC	SN	BRASS	BOX	285
10-0502-4050-00-0211	500 Series double euro profile cylinder, key + key, 90=40mm+50mm, Polished Brass, Box	PC	PB	BRASS	BOX	295
10-0502-4050-00-2211	500 Series double euro profile cylinder, key + key, 90=40mm+50mm, Satin Nickel, Box	PC	SN	BRASS	BOX	295
10-0502-4545-00-0211	500 Series double euro profile cylinder, key + key, 90=45mm+45mm, Polished Brass, Box	PC	PB	BRASS	BOX	295
10-0502-4545-00-2211	500 Series double euro profile cylinder, key + key, 90=45mm+45mm, Satin Nickel, Box	PC	SN	BRASS	BOX	295
10-0502-4550-00-0211	500 Series double euro profile cylinder, key + key, 95=45mm+50mm, Polished Brass, Box	PC	PB	BRASS	BOX	305
10-0502-4550-00-2211	500 Series double euro profile cylinder, key + key, 95=45mm+50mm, Satin Nickel, Box	PC	SN	BRASS	BOX	305
10-0502-5050-00-0211	500 Series double euro profile cylinder, key + key, 100=50mm+50mm, Polished Brass, Box	PC	PB	BRASS	BOX	315
10-0502-5050-00-2211	500 Series double euro profile cylinder, key + key, 100=50mm+50mm, Satin Nickel, Box	PC	SN	BRASS	BOX	315

Double Euro Profile Cylinders

500 Series

KEY + KEY

SKU	DESCRIPTION	UOM	FIN	MAT	PKG	WGT
10-0503-3030-CK-0201	500 Series double euro profile cylinder, key + knob, 60=30mm+30mm, Polished Brass, Blister	PC	PB	BRASS	BLIST	285
10-0503-3030-CK-2201	500 Series double euro profile cylinder, key + knob, 60=30mm+30mm, Satin Nickel, Blister	PC	SN	BRASS	BLIST	285
10-0503-3035-CK-0201	500 Series double euro profile cylinder, key + knob, 65=30mm+35mm, Polished Brass, Blister	PC	PB	BRASS	BLIST	300
10-0503-3035-CK-2201	500 Series double euro profile cylinder, key + knob, 65=30mm+35mm, Satin Nickel, Blister	PC	SN	BRASS	BLIST	300
10-0503-3040-CK-0201	500 Series double euro profile cylinder, key + knob, 70=30mm+40mm, Polished Brass, Blister	PC	PB	BRASS	BLIST	315
10-0503-3040-CK-2201	500 Series double euro profile cylinder, key + knob, 70=30mm+40mm, Satin Nickel, Blister	PC	SN	BRASS	BLIST	315
10-0503-3045-CK-0201	500 Series double euro profile cylinder, key + knob, 75=30mm+45mm, Polished Brass, Blister	PC	PB	BRASS	BLIST	330
10-0503-3045-CK-2201	500 Series double euro profile cylinder, key + knob, 75=30mm+45mm, Satin Nickel, Blister	PC	SN	BRASS	BLIST	330
10-0503-3137-CK-0201	500 Series double euro profile cylinder, key + knob, 68=31mm+37mm, Polished Brass, Blister	PC	PB	BRASS	BLIST	310
10-0503-3137-CK-2201	500 Series double euro profile cylinder, key + knob, 68=31mm+37mm, Satin Nickel, Blister	PC	SN	BRASS	BLIST	310
10-0503-3535-CK-0201	500 Series double euro profile cylinder, key + knob, 70=35mm+35mm, Polished Brass, Blister	PC	PB	BRASS	BLIST	315
10-0503-3535-CK-2201	500 Series double euro profile cylinder, key + knob, 70=35mm+35mm, Satin Nickel, Blister	PC	SN	BRASS	BLIST	315
10-0503-3540-CK-0201	500 Series double euro profile cylinder, key + knob, 75=35mm+40mm, Polished Brass, Blister	PC	PB	BRASS	BLIST	330
10-0503-3540-CK-2201	500 Series double euro profile cylinder, key + knob, 75=35mm+40mm, Satin Nickel, Blister	PC	SN	BRASS	BLIST	330
10-0503-3545-CK-0201	500 Series double euro profile cylinder, key + knob, 80=35mm+45mm, Polished Brass, Blister	PC	PB	BRASS	BLIST	345
10-0503-3545-CK-2201	500 Series double euro profile cylinder, key + knob, 80=35mm+45mm, Satin Nickel, Blister	PC	SN	BRASS	BLIST	345
10-0503-3550-CK-0201	500 Series double euro profile cylinder, key + knob, 85=35mm+50mm, Polished Brass, Blister	PC	PB	BRASS	BLIST	360
10-0503-3550-CK-2201	500 Series double euro profile cylinder, key + knob, 85=35mm+50mm, Satin Nickel, Blister	PC	SN	BRASS	BLIST	360
10-0503-4040-CK-0201	500 Series double euro profile cylinder, key + knob, 80=40mm+40mm, Polished Brass, Blister	PC	PB	BRASS	BLIST	345
10-0503-4040-CK-2201	500 Series double euro profile cylinder, key + knob, 80=40mm+40mm, Satin Nickel, Blister	PC	SN	BRASS	BLIST	345
10-0503-4045-CK-0201	500 Series double euro profile cylinder, key + knob, 85=40mm+45mm, Polished Brass, Blister	PC	PB	BRASS	BLIST	360
10-0503-4045-CK-2201	500 Series double euro profile cylinder, key + knob, 85=40mm+45mm, Satin Nickel, Blister	PC	SN	BRASS	BLIST	360
10-0503-4050-CK-0201	500 Series double euro profile cylinder, key + knob, 90=40mm+50mm, Polished Brass, Blister	PC	PB	BRASS	BLIST	375
10-0503-4050-CK-2201	500 Series double euro profile cylinder, key + knob, 90=40mm+50mm, Satin Nickel, Blister	PC	SN	BRASS	BLIST	375
10-0503-4545-CK-0201	500 Series double euro profile cylinder, key + knob, 90=45mm+45mm, Polished Brass, Blister	PC	PB	BRASS	BLIST	375

Double Euro Profile Cylinders

500 Series

KEY + KEY

SKU	DESCRIPTION	UOM	FIN	MAT	PKG	WGT
10-0503-4545-CK-2201	500 Series double euro profile cylinder, key + knob, 90=45mm+45mm, Satin Nickel, Blister	PC	SN	BRASS	BLIST	375
10-0503-4550-CK-0201	500 Series double euro profile cylinder, key + knob, 95=45mm+50mm, Polished Brass, Blister	PC	PB	BRASS	BLIST	390
10-0503-4550-CK-2201	500 Series double euro profile cylinder, key + knob, 95=45mm+50mm, Satin Nickel, Blister	PC	SN	BRASS	BLIST	390
10-0503-5050-CK-0201	500 Series double euro profile cylinder, key + knob, 100=50mm+50mm, Polished Brass, Blister	PC	PB	BRASS	BLIST	405
10-0503-5050-CK-2201	500 Series double euro profile cylinder, key + knob, 100=50mm+50mm, Satin Nickel, Blister	PC	SN	BRASS	BLIST	405
10-0503-3030-CK-0211	500 Series double euro profile cylinder, key + knob, 60=30mm+30mm, Polished Brass, Box	PC	PB	BRASS	BOX	285
10-0503-3030-CK-2211	500 Series double euro profile cylinder, key + knob, 60=30mm+30mm, Satin Nickel, Box	PC	SN	BRASS	BOX	285
10-0503-3035-CK-0211	500 Series double euro profile cylinder, key + knob, 65=30mm+35mm, Polished Brass, Box	PC	PB	BRASS	BOX	300
10-0503-3035-CK-2211	500 Series double euro profile cylinder, key + knob, 65=30mm+35mm, Satin Nickel, Box	PC	SN	BRASS	BOX	300
10-0503-3040-CK-0211	500 Series double euro profile cylinder, key + knob, 70=30mm+40mm, Polished Brass, Box	PC	PB	BRASS	BOX	315
10-0503-3040-CK-2211	500 Series double euro profile cylinder, key + knob, 70=30mm+40mm, Satin Nickel, Box	PC	SN	BRASS	BOX	315
10-0503-3045-CK-0211	500 Series double euro profile cylinder, key + knob, 75=30mm+45mm, Polished Brass, Box	PC	PB	BRASS	BOX	330
10-0503-3045-CK-2211	500 Series double euro profile cylinder, key + knob, 75=30mm+45mm, Satin Nickel, Box	PC	SN	BRASS	BOX	330
10-0503-3137-CK-0211	500 Series double euro profile cylinder, key + knob, 68=31mm+37mm, Polished Brass, Box	PC	PB	BRASS	BOX	310
10-0503-3137-CK-2211	500 Series double euro profile cylinder, key + knob, 68=31mm+37mm, Satin Nickel, Box	PC	SN	BRASS	BOX	310
10-0503-3535-CK-0211	500 Series double euro profile cylinder, key + knob, 70=35mm+35mm, Polished Brass, Box	PC	PB	BRASS	BOX	315
10-0503-3535-CK-2211	500 Series double euro profile cylinder, key + knob, 70=35mm+35mm, Satin Nickel, Box	PC	SN	BRASS	BOX	315
10-0503-3540-CK-0211	500 Series double euro profile cylinder, key + knob, 75=35mm+40mm, Polished Brass, Box	PC	PB	BRASS	BOX	330
10-0503-3540-CK-2211	500 Series double euro profile cylinder, key + knob, 75=35mm+40mm, Satin Nickel, Box	PC	SN	BRASS	BOX	330
10-0503-3545-CK-0211	500 Series double euro profile cylinder, key + knob, 80=35mm+45mm, Polished Brass, Box	PC	PB	BRASS	BOX	345
10-0503-3545-CK-2211	500 Series double euro profile cylinder, key + knob, 80=35mm+45mm, Satin Nickel, Box	PC	SN	BRASS	BOX	345
10-0503-3550-CK-0211	500 Series double euro profile cylinder, key + knob, 85=35mm+50mm, Polished Brass, Box	PC	PB	BRASS	BOX	360
10-0503-3550-CK-2211	500 Series double euro profile cylinder, key + knob, 85=35mm+50mm, Satin Nickel, Box	PC	SN	BRASS	BOX	360
10-0503-4040-CK-0211	500 Series double euro profile cylinder, key + knob, 80=40mm+40mm, Polished Brass, Box	PC	PB	BRASS	BOX	345
10-0503-4040-CK-2211	500 Series double euro profile cylinder, key + knob, 80=40mm+40mm, Satin Nickel, Box	PC	SN	BRASS	BOX	345

Double Euro Profile Cylinders
500 Series

KEY + KNOB

SKU	DESCRIPTION	UOM	FIN	MAT	PKG	WGT
10-0503-4045-CK-0211	500 Series double euro profile cylinder, key + knob, 85=40mm+45mm, Polished Brass, Box	PC	PB	BRASS	BOX	360
10-0503-4045-CK-2211	500 Series double euro profile cylinder, key + knob, 85=40mm+45mm, Satin Nickel, Box	PC	SN	BRASS	BOX	360
10-0503-4050-CK-0211	500 Series double euro profile cylinder, key + knob, 90=40mm+50mm, Polished Brass, Box	PC	PB	BRASS	BOX	375
10-0503-4050-CK-2211	500 Series double euro profile cylinder, key + knob, 90=40mm+50mm, Satin Nickel, Box	PC	SN	BRASS	BOX	375
10-0503-4545-CK-0211	500 Series double euro profile cylinder, key + knob, 90=45mm+45mm, Polished Brass, Box	PC	PB	BRASS	BOX	375
10-0503-4545-CK-2211	500 Series double euro profile cylinder, key + knob, 90=45mm+45mm, Satin Nickel, Box	PC	SN	BRASS	BOX	375
10-0503-4550-CK-0211	500 Series double euro profile cylinder, key + knob, 95=45mm+50mm, Polished Brass, Box	PC	PB	BRASS	BOX	390
10-0503-4550-CK-2211	500 Series double euro profile cylinder, key + knob, 95=45mm+50mm, Satin Nickel, Box	PC	SN	BRASS	BOX	390
10-0503-5050-CK-0211	500 Series double euro profile cylinder, key + knob, 100=50mm+50mm, Polished Brass, Box	PC	PB	BRASS	BOX	405
10-0503-5050-CK-2211	500 Series double euro profile cylinder, key + knob, 100=50mm+50mm, Satin Nickel, Box	PC	SN	BRASS	BOX	405

KEY + EMERGENCY RELEASE

10-0513-2727-CK-0201	500 Series double euro profile cylinder, knob + Coin turn, 54=27mm+27mm, Polished Brass, Blister	PC	PB	BRASS	BLIST	270
10-0513-2727-CK-2201	500 Series double euro profile cylinder, knob + Coin turn, 54=27mm+27mm, Satin Nickel, Blister	PC	SN	BRASS	BLIST	270
10-0513-3030-CK-0201	500 Series double euro profile cylinder, knob + Coin turn, 60=30mm+30mm, Polished Brass, Blister	PC	PB	BRASS	BLIST	285
10-0513-3030-CK-2201	500 Series double euro profile cylinder, knob + Coin turn, 60=30mm+30mm, Satin Nickel, Blister	PC	SN	BRASS	BLIST	285
10-0513-3535-CK-0201	500 Series double euro profile cylinder, knob + Coin turn, 70=35mm+35mm, Polished Brass, Blister	PC	PB	BRASS	BLIST	300
10-0513-3535-CK-2201	500 Series double euro profile cylinder, knob + Coin turn, 70=35mm+35mm, Satin Nickel, Blister	PC	SN	BRASS	BLIST	300
10-0513-2727-CK-0211	500 Series double euro profile cylinder, knob + Coin turn, 54=27mm+27mm, Polished Brass, Box	PC	PB	BRASS	BOX	270
10-0513-2727-CK-2211	500 Series double euro profile cylinder, knob + Coin turn, 54=27mm+27mm, Satin Nickel, Box	PC	SN	BRASS	BOX	270
10-0513-3030-CK-0211	500 Series double euro profile cylinder, knob + Coin turn, 60=30mm+30mm, Polished Brass, Box	PC	PB	BRASS	BOX	285
10-0513-3030-CK-2211	500 Series double euro profile cylinder, knob + Coin turn, 60=30mm+30mm, Satin Nickel, Box	PC	SN	BRASS	BOX	285

Single Euro Profile Cylinders
500 Series

KEY

SKU	DESCRIPTION	UOM	FIN	MAT	PKG	WGT
10-0501-0027-00-0201	500 Series single euro profile cylinder, one side key, 27=00mm+27mm, Polished Brass, Blister	PC	PB	BRASS	BLIST	143
10-0501-0027-00-2201	500 Series single euro profile cylinder, one side key, 27=00mm+27mm, Satin Nickel, Blister	PC	SN	BRASS	BLIST	143
10-0501-0030-00-0201	500 Series single euro profile cylinder, one side key, 30=00mm+30mm, Polished Brass, Blister	PC	PB	BRASS	BLIST	155
10-0501-0030-00-2201	500 Series single euro profile cylinder, one side key, 30=00mm+30mm, Satin Nickel, Blister	PC	SN	BRASS	BLIST	155
10-0501-0035-00-0201	500 Series single euro profile cylinder, one side key, 35=00mm+35mm, Polished Brass, Blister	PC	PB	BRASS	BLIST	165
10-0501-0035-00-2201	500 Series single euro profile cylinder, one side key, 35=00mm+35mm, Satin Nickel, Blister	PC	SN	BRASS	BLIST	165
10-0501-0040-00-0201	500 Series single euro profile cylinder, one side key, 40=00mm+40mm, Polished Brass, Blister	PC	PB	BRASS	BLIST	185
10-0501-0040-00-2201	500 Series single euro profile cylinder, one side key, 40=00mm+40mm, Satin Nickel, Blister	PC	SN	BRASS	BLIST	185
10-0501-0045-00-0201	500 Series single euro profile cylinder, one side key, 45=00mm+45mm, Polished Brass, Blister	PC	PB	BRASS	BLIST	205
10-0501-0045-00-2201	500 Series single euro profile cylinder, one side key, 45=00mm+45mm, Satin Nickel, Blister	PC	SN	BRASS	BLIST	205
10-0501-0050-00-0201	500 Series single euro profile cylinder, one side key, 50=00mm+50mm, Polished Brass, Blister	PC	PB	BRASS	BLIST	220
10-0501-0050-00-2201	500 Series single euro profile cylinder, one side key, 50=00mm+50mm, Satin Nickel, Blister	PC	SN	BRASS	BLIST	220
10-0501-0027-00-0211	500 Series single euro profile cylinder, one side key, 27=00mm+27mm, Polished Brass, Box	PC	PB	BRASS	BOX	143
10-0501-0027-00-2211	500 Series single euro profile cylinder, one side key, 27=00mm+27mm, Satin Nickel, Box	PC	SN	BRASS	BOX	143
10-0501-0030-00-0211	500 Series single euro profile cylinder, one side key, 30=00mm+30mm, Polished Brass, Box	PC	PB	BRASS	BOX	155
10-0501-0030-00-2211	500 Series single euro profile cylinder, one side key, 30=00mm+30mm, Satin Nickel, Box	PC	SN	BRASS	BOX	155
10-0501-0035-00-0211	500 Series single euro profile cylinder, one side key, 35=00mm+35mm, Polished Brass, Box	PC	PB	BRASS	BOX	165
10-0501-0035-00-2211	500 Series single euro profile cylinder, one side key, 35=00mm+35mm, Satin Nickel, Box	PC	SN	BRASS	BOX	165
10-0501-0040-00-0211	500 Series single euro profile cylinder, one side key, 40=00mm+40mm, Polished Brass, Box	PC	PB	BRASS	BOX	185
10-0501-0040-00-2211	500 Series single euro profile cylinder, one side key, 40=00mm+40mm, Satin Nickel, Box	PC	SN	BRASS	BOX	185
10-0501-0045-00-0211	500 Series single euro profile cylinder, one side key, 45=00mm+45mm, Polished Brass, Box	PC	PB	BRASS	BOX	205
10-0501-0045-00-2211	500 Series single euro profile cylinder, one side key, 45=00mm+45mm, Satin Nickel, Box	PC	SN	BRASS	BOX	205
10-0501-0050-00-0211	500 Series single euro profile cylinder, one side key, 50=00mm+50mm, Polished Brass, Box	PC	PB	BRASS	BOX	220
10-0501-0050-00-2211	500 Series single euro profile cylinder, one side key, 50=00mm+50mm, Satin Nickel, Box	PC	SN	BRASS	BOX	220

Key blank
500 Series

Specifications:
- Key blanks for 500 Series cylinders
- Packed in boxes of 25 pieces

SKU	DESCRIPTION	PKG	WGT
10-0500-0000-00-00-45	Box of key blanks for 500 & 250 series	box of 25 pieces	10

Double Euro Profile Cylinder
210 Series

Specifications:
- Standard security Euro profile cylinder
- Brass Material
- Size available from 45mm - 140mm
- Finish available - Satin Nickel (add 002 at the end of the SKU code), Polish Brass
- Type: Entrance, Bedroom, Toliet cylinders

Key Highlights:

- Regular key
- 5 pins
- Supplied with 3 keys

PATENTED REGULAR 5 PIN 3

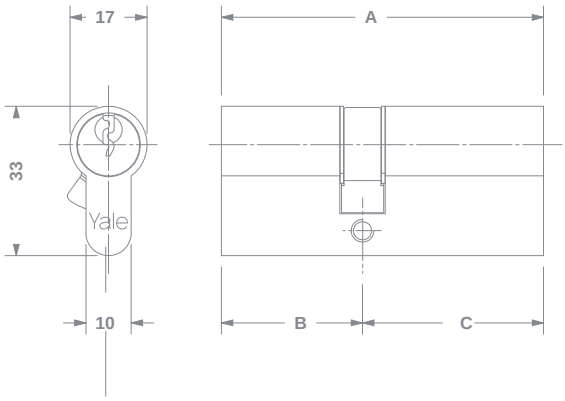

KEY + KEY

SKU	DESCRIPTION	UOM	FIN	MAT	PKG	WGT
2100045	210 Series double euro profile cylinder, Key + Key, 45=22mm+23mm, Satin Brass, Box	PC	SB	BRASS	BOX	174
2100054	210 Series double euro profile cylinder, Key + Key, 54=27mm+27mm, Satin Brass, Box	PC	SB	BRASS	BOX	177
2100058	210 Series double euro profile cylinder, Key + Key, 58=27mm+31mm, Satin Brass, Box	PC	SB	BRASS	BOX	212
2100062	210 Series double euro profile cylinder, Key + Key, 62=31mm+31mm, Satin Brass, Box	PC	SB	BRASS	BOX	225
2100063	210 Series double euro profile cylinder, Key + Key, 62=27mm+35mm, Satin Brass, Box	PC	SB	BRASS	BOX	225
2100066	210 Series double euro profile cylinder, Key + Key, 66=31mm+35mm, Satin Brass, Box	PC	SB	BRASS	BOX	236
2100070	210 Series double euro profile cylinder, Key + Key, 70=27mm+43mm, Satin Brass, Box	PC	SB	BRASS	BOX	250
2100071	210 Series double euro profile cylinder, Key + Key, 70=35mm+35mm, Satin Brass, Box	PC	SB	BRASS	BOX	250
2100072	210 Series double euro profile cylinder, Key + Key, 71=31mm+40mm, Satin Brass, Box	PC	SB	BRASS	BOX	250
2100075	210 Series double euro profile cylinder, Key + Key, 74=31mm+43mm, Satin Brass, Box	PC	SB	BRASS	BOX	263
2100076	210 Series double euro profile cylinder, Key + Key, 75=35mm+40mm, Satin Brass, Box	PC	SB	BRASS	BOX	263
2100080	210 Series double euro profile cylinder, Key + Key, 79=27mm+52mm, Satin Brass, Box	PC	SB	BRASS	BOX	277
2100081	210 Series double euro profile cylinder, Key + Key, 80=40mm+40mm, Satin Brass, Box	PC	SB	BRASS	BOX	277
2100082	210 Series double euro profile cylinder, Key + Key, 78=35mm+43mm, Satin Brass, Box	PC	SB	BRASS	BOX	277
2100084	210 Series double euro profile cylinder, Key + Key, 83=31mm+52mm, Satin Brass, Box	PC	SB	BRASS	BOX	288
2100085	210 Series double euro profile cylinder, Key + Key, 83=40mm+43mm, Satin Brass, Box	PC	SB	BRASS	BOX	88
2100086	210 Series double euro profile cylinder, Key + Key, 86=43mm+43mm, Satin Brass, Box	PC	SB	BRASS	BOX	300
2100087	210 Series double euro profile cylinder, Key + Key, 87=45mm+52mm, Satin Brass, Box	PC	SB	BRASS	BOX	325
2100092	210 Series double euro profile cylinder, Key + Key, 92=31mm+61mm, Satin Brass, Box	PC	SB	BRASS	BOX	315
2100093	210 Series double euro profile cylinder, Key + Key, 92=40mm+52mm, Satin Brass, Box	PC	SB	BRASS	BOX	315
2100095	210 Series double euro profile cylinder, Key + Key, 95=43mm+52mm, Satin Brass, Box	PC	SB	BRASS	BOX	350
2100096	210 Series double euro profile cylinder, Key + Key, 96=35mm+61mm, Satin Brass, Box	PC	SB	BRASS	BOX	326
2100010	210 Series double euro profile cylinder, Key + Key, 100=31mm+69mm, Satin Brass, Box	PC	SB	BRASS	BOX	340
2100011	210 Series double euro profile cylinder, Key + Key, 104=43mm+61mm, Satin Brass, Box	PC	SB	BRASS	BOX	353
2100012	210 Series double euro profile cylinder, Key + Key, 104=52mm+52mm, Satin Brass, Box	PC	SB	BRASS	BOX	353

Double Euro Profile Cylinder

210 Series

KEY + KEY

SKU	DESCRIPTION	UOM	FIN	MAT	PKG	WGT
2100013	210 Series double euro profile cylinder, Key + Key, 113=52mm+61mm, Satin Nickel, Box	PC	SB	BRASS	BOX	379
2100014	210 Series double euro profile cylinder, Key + Key, 113=31mm+82mm, Satin Nickel, Box	PC	SB	BRASS	BOX	381
2100015	210 Series double euro profile cylinder, Key + Key, 113=27mm+86mm, Satin Nickel, Box	PC	SB	BRASS	BOX	380
2100016	210 Series double euro profile cylinder, Key + Key, 101=40mm+61mm, Satin Nickel, Box	PC	SB	BRASS	BOX	340
2100022	210 Series double euro profile cylinder, Key + Key, 125=82mm+43mm, Satin Nickel, Box	PC	SB	BRASS	BOX	20
2100023	210 Series double euro profile cylinder, Key + Key, 108=65mm+43mm, Satin Nickel, Box	PC	SB	BRASS	BOX	360
2100024	210 Series double euro profile cylinder, Key + Key, 116=73mm+43mm, Satin Nickel, Box	PC	SB	BRASS	BOX	56
2100025	210 Series double euro profile cylinder, Key + Key, 122=61mm+61mm, Satin Nickel, Box	PC	SB	BRASS	BOX	30
2100026	210 Series double euro profile cylinder, Key + Key, 138=69mm+69mm, Satin Nickel, Box	PC	SB	BRASS	BOX	50
2100027	210 Series double euro profile cylinder, Key + Key, 143=82mm+61mm, Satin Nickel, Box	PC	SB	BRASS	BOX	65

Profile Cylinder with Knob
214 Series

Specifications:
- Double euro profile cylinder - Key + Knob
- Standard security
- Brass Material
- Size available from 58mm-125mm
- Finish available - Satin Nickel (Add 002 at the end of the SKU code), Polish Brass
- Type: Entrance, Bedroom Function

Key Highlights:
- Regular key
- 5 pins
- Supplied with 3 keys

PATENTED REGULAR 5 PIN 3

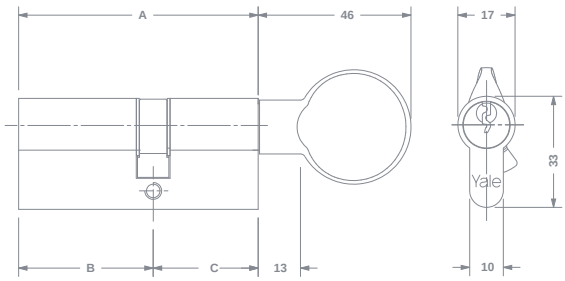

KEY + KNOB

SKU	DESCRIPTION	UOM	FIN	MAT	PKG	WGT
2140058	214 Series double euro profile cylinder, key + knob, 58=27mm+31mm, Satin Brass, Box	PC	SB	BRASS	BOX	274
2140063	214 Series double euro profile cylinder, key + knob, 62=27mm+35mm, Satin Brass, Box	PC	SB	BRASS	BOX	284
2140066	214 Series double euro profile cylinder, key + knob, 66=31mm+35mm, Satin Brass, Box	PC	SB	BRASS	BOX	299
2140070	214 Series double euro profile cylinder, key + knob, 70=27mm+43mm, Satin Brass, Box	PC	SB	BRASS	BOX	312
2140080	214 Series double euro profile cylinder, key + knob, 79=27mm+52mm, Satin Brass, Box	PC	SB	BRASS	BOX	40
2140082	214 Series double euro profile cylinder, key + knob, 78=35mm+43mm, Satin Brass, Box	PC	SB	BRASS	BOX	40
2140084	214 Series double euro profile cylinder, key + knob, 83=31mm+52mm, Satin Brass, Box	PC	SB	BRASS	BOX	50
2140085	214 Series double euro profile cylinder, key + knob, 83=40mm+43mm, Satin Brass, Box	PC	SB	BRASS	BOX	88
2140087	214 Series double euro profile cylinder, key + knob, 87=35mm+52mm, Satin Brass, Box	PC	SB	BRASS	BOX	88
2140092	214 Series double euro profile cylinder, key + knob, 92=31mm+61mm, Satin Brass, Box	PC	SB	BRASS	BOX	80

Profile Cylinder with Knob

214 Series

KEY + KNOB

SKU	DESCRIPTION	UOM	FIN	MAT	PKG	WGT
2140093	214 Series double euro profile cylinder, key + knob, 92=40mm+52mm, Satin Brass, Box	PC	SB	BRASS	BOX	80
2140095	214 Series double euro profile cylinder, key + knob, 95=43mm+52mm, Satin Brass, Box	PC	SB	BRASS	BOX	15
2140096	214 Series double euro profile cylinder, key + knob, 96=35mm+61mm, Satin Brass, Box	PC	SB	BRASS	BOX	15
2140060	214 Series double euro profile cylinder, key + knob, 58=31mm+27mm, Satin Brass, Box	PC	SB	BRASS	BOX	260
2140068	214 Series double euro profile cylinder, key + knob, 66=35mm+31mm, Satin Brass, Box	PC	SB	BRASS	BOX	299
2140069	214 Series double euro profile cylinder, key + knob, 70=43mm+27mm, Satin Brass, Box	PC	SB	BRASS	BOX	330
2140073	214 Series double euro profile cylinder, key + knob, 71=40mm+31mm, Satin Brass, Box	PC	SB	BRASS	BOX	312
2140074	214 Series double euro profile cylinder, key + knob, 74=43mm+31mm, Satin Brass, Box	PC	SB	BRASS	BOX	326
2140076	214 Series double euro profile cylinder, key + knob, 75=40mm+35mm, Satin Brass, Box	PC	SB	BRASS	BOX	326
2140079	214 Series double euro profile cylinder, key + knob, 79=52mm+27mm, Satin Brass, Box	PC	SB	BRASS	BOX	40
2140083	214 Series double euro profile cylinder, key + knob, 83=52mm+31mm, Satin Brass, Box	PC	SB	BRASS	BOX	40
2140088	214 Series double euro profile cylinder, key + knob, 87=52mm+35mm, Satin Brass, Box	PC	SB	BRASS	BOX	88
2140091	214 Series double euro profile cylinder, key + knob, 92=61mm+31mm, Satin Brass, Box	PC	SB	BRASS	BOX	80
2140094	214 Series double euro profile cylinder, key + knob, 95=52mm+43mm, Satin Brass, Box	PC	SB	BRASS	BOX	15
2140097	214 Series double euro profile cylinder, key + knob, 96=61mm+35mm, Satin Brass, Box	PC	SB	BRASS	BOX	20
2140016	214 Series double euro profile cylinder, key + knob, 101=40mm+61mm, Satin Brass, Box	PC	SB	BRASS	BOX	25
2140017	214 Series double euro profile cylinder, key + knob, 100=69mm+31mm, Satin Brass, Box	PC	SB	BRASS	BOX	25
2140018	214 Series double euro profile cylinder, key + knob, 104=61mm+43mm, Satin Brass, Box	PC	SB	BRASS	BOX	30
2140019	214 Series double euro profile cylinder, key + knob, 104=52mm+52mm, Satin Brass, Box	PC	SB	BRASS	BOX	30
2140020	214 Series double euro profile cylinder, key + knob, 112=69mm+43mm, Satin Brass, Box	PC	SB	BRASS	BOX	35
2140021	214 Series double euro profile cylinder, key + knob, 113=82mm+31mm, Satin Brass, Box	PC	SB	BRASS	BOX	35
2140022	214 Series double euro profile cylinder, key + knob, 125=82mm+43mm, Satin Brass, Box	PC	SB	BRASS	BOX	40
2140054	214 Series double euro profile cylinder, key + knob, 54=27mm+27mm, Satin Brass, Box	PC	SB	BRASS	BOX	254
2140062	214 Series double euro profile cylinder, key + knob, 62=31mm+31mm, Satin Brass, Box	PC	SB	BRASS	BOX	285
2140071	214 Series double euro profile cylinder, key + knob, 70=35mm+35mm, Satin Brass, Box	PC	SB	BRASS	BOX	312
2140086	214 Series double euro profile cylinder, key + knob, 86=43mm+43mm, Satin Brass, Box	PC	SB	BRASS	BOX	88

Double Euro Profile Cylinder
215 Series

Specifications:
- Double euro profile cylinder - Knob + Coin turn
- Brass Material
- Size available from 54mm-74mm
- Finish available - Satin Nickel (Add 002 at the end of the SKU code), Polish Brass
- Type: Bathroom function

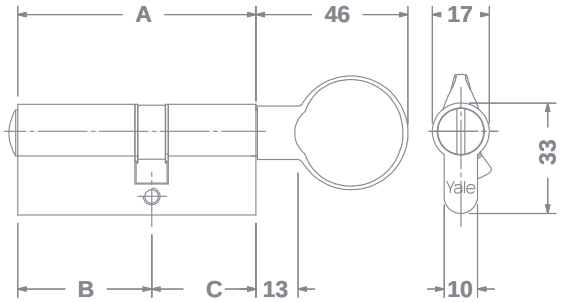

KNOB + EMERGENCY

SKU	DESCRIPTION	UOM	FIN	MAT	PKG	WGT
2150054	215 Series double euro profile cylinder, knob + bathroom, 54=27mm+27mm, Satin Brass, Box	PC	SB	BRASS	BOX	245
2150058	215 Series double euro profile cylinder, knob + bathroom, 58=27mm+31mm, Satin Brass, Box	PC	SB	BRASS	BOX	245
2150062	215 Series double euro profile cylinder, knob + bathroom, 62=31mm+31mm, Satin Brass, Box	PC	SB	BRASS	BOX	245
2150069	215 Series double euro profile cylinder, knob + bathroom, 70=43mm+27mm, Satin Brass, Box	PC	SB	BRASS	BOX	257
2150070	215 Series double euro profile cylinder, knob + bathroom, 70=27mm+43mm, Satin Brass, Box	PC	SB	BRASS	BOX	257
2150071	215 Series double euro profile cylinder, knob + bathroom, 70=35mm+35mm, Satin Brass, Box	PC	SB	BRASS	BOX	257
2150075	215 Series double euro profile cylinder, knob + bathroom, 74=31mm+43mm, Satin Brass, Box	PC	SB	BRASS	BOX	257

Single Profile Cylinder
212 Series

Specifications:
- Single euro profile cylinder - One side key
- Standard security
- Brass Material
- 5 pins
- Size available from 36mm - 99mm
- Finish available - Satin Nickel (Add 002 at the end of the SKU code), Polish Brass
- Type: Entrance, Bedroom, Toliet cylinders

Key highlights:
- Regular key
- 5 pins
- Supplied with 3 keys

PATENTED REGULAR 5 PIN 3

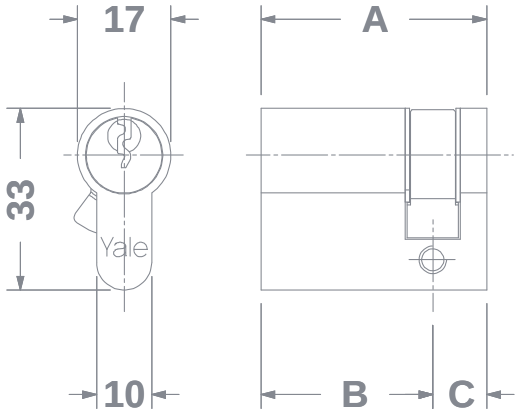

KEY

SKU	DESCRIPTION	UOM	FIN	MAT	PKG	WGT
2120036	212 Series single euro profile cylinder, one side key, 36mm, Satin Brass, Box	PC	SB	BRASS	BOX	143
2120040	212 Series single euro profile cylinder, one side key, 40mm, Satin Brass, Box	PC	SB	BRASS	BOX	155
2120044	212 Series single euro profile cylinder, one side key, 44mm, Satin Brass, Box	PC	SB	BRASS	BOX	162
2120052	212 Series single euro profile cylinder, one side key, 52mm, Satin Brass, Box	PC	SB	BRASS	BOX	202
2120061	212 Series single euro profile cylinder, one side key, 61mm, Satin Brass, Box	PC	SB	BRASS	BOX	215
2120070	212 Series single euro profile cylinder, one side key, 70mm, Satin Brass, Box	PC	SB	BRASS	BOX	240
2120078	212 Series single euro profile cylinder, one side key, 78mm, Satin Brass, Box	PC	SB	BRASS	BOX	285
2120091	212 Series single euro profile cylinder, one side key, 91mm, Satin Brass, Box	PC	SB	BRASS	BOX	325
2120099	212 Series single euro profile cylinder, one side key, 99mm, Satin Brass, Box	PC	SB	BRASS	BOX	365

Screw-in Cylinder
1152 Series

Specifications:
- Screw In cylinder
- Standard security
- Brass Material
- Finish available - Satin Nickel
- Type: Entrance

Key Highlights:
- Regular key
- Supplied with 3 keys

REGULAR 3

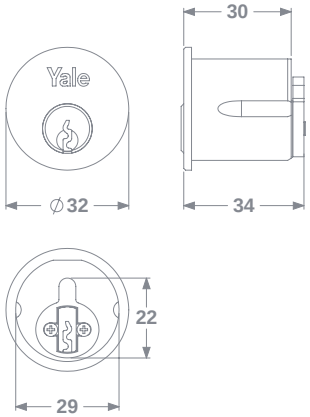

SKU	DESCRIPTION	UOM	FIN	MAT	PKG	WGT
B-1152US26	1152 Series, Mortice screw-in cylinder - Key code B-9KB-NP	PC	CP	BRASS	BOX	186
B-1152US26D	1152 Series, Mortice screw-in cylinder - Key code B-9KB-NP	PC	SC	BRASS	BOX	186

Yale®

Padlocks

Types of Padlocks & Fittings

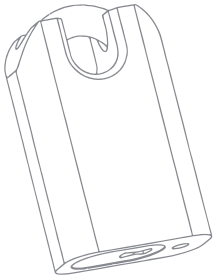

Closed Shackle

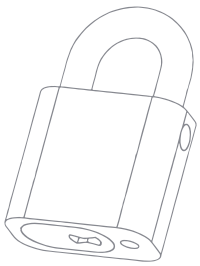

Open Shackle

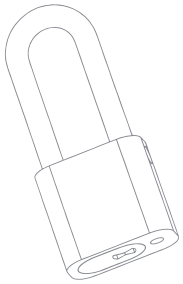

Long Shackle

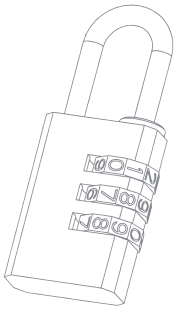

Combination

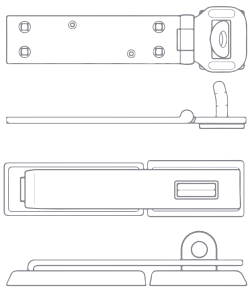

Padbar Hasp & Staple

What's a Padlock?

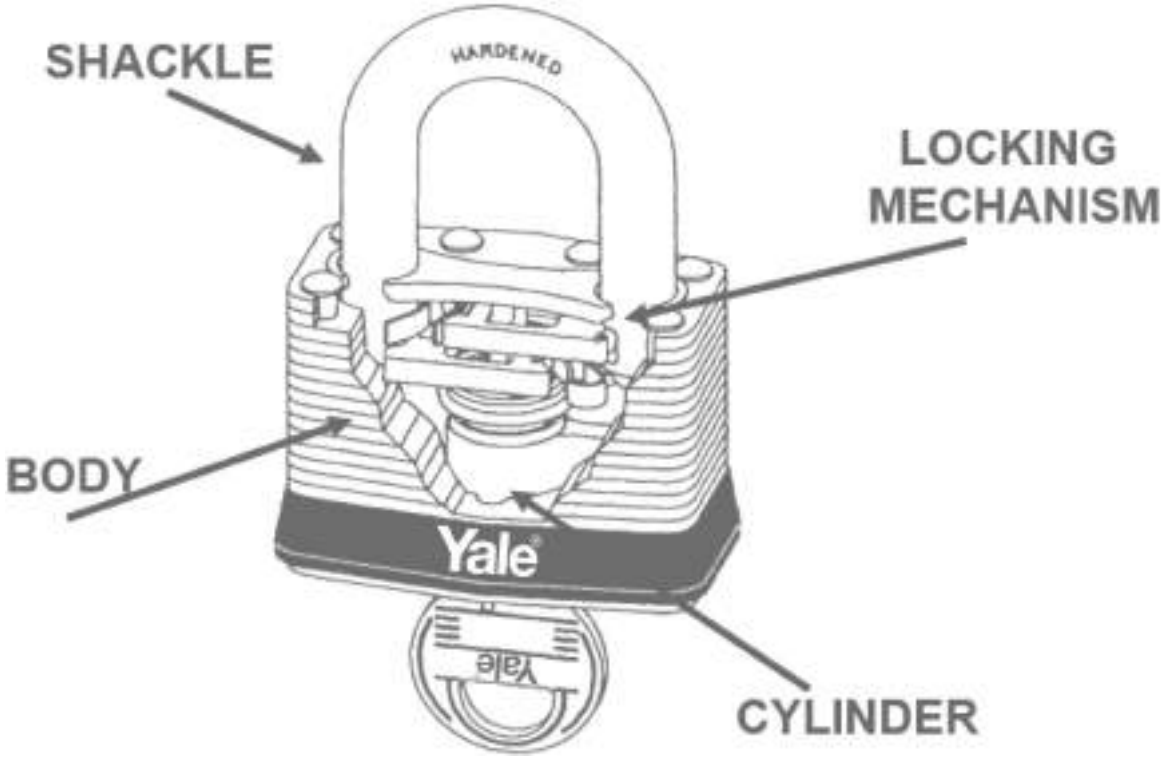

Strength of a Lock

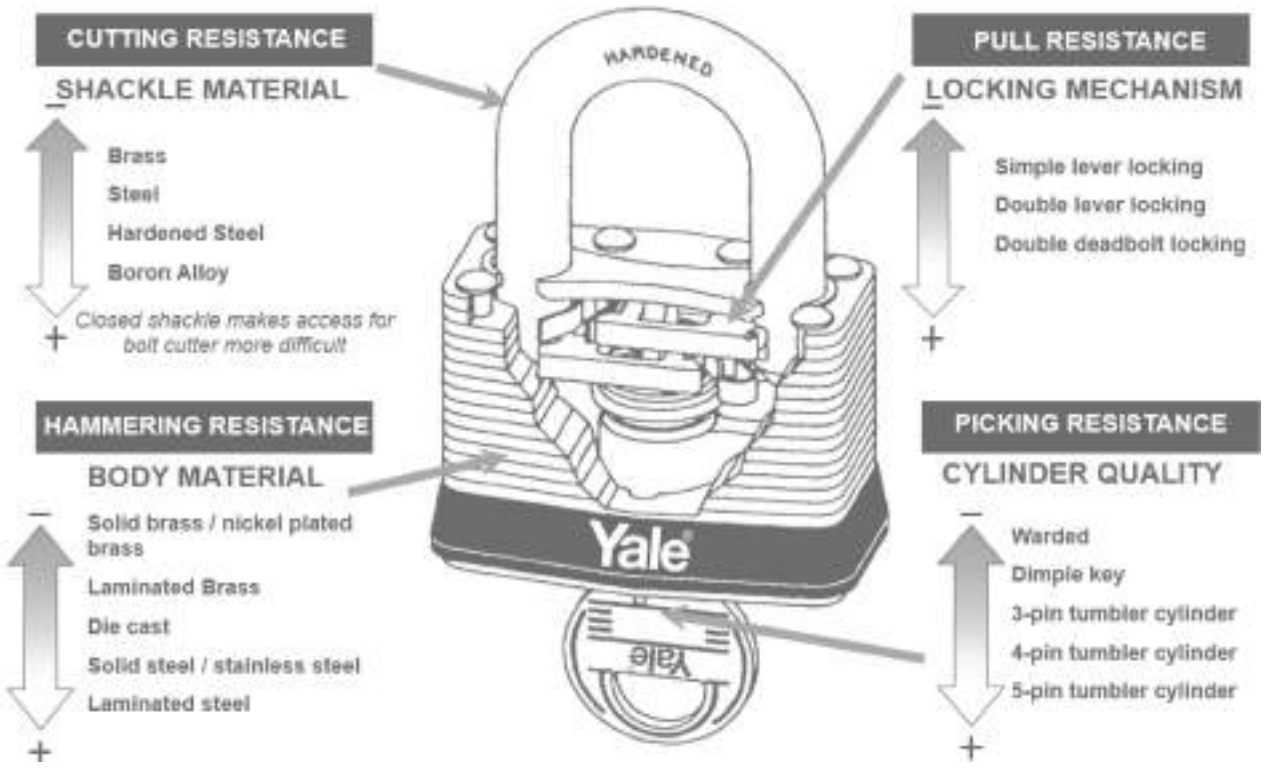

Brass padlocks
110 Series

Specifications:
- Key can be removed with padlock open or closed

Features:
- Solid brass body
- Hardened chrome-plated steel shackle
- 2 nickel-plated brass keys
- Double locking shackle > mm 30
- Available in box and blister pack

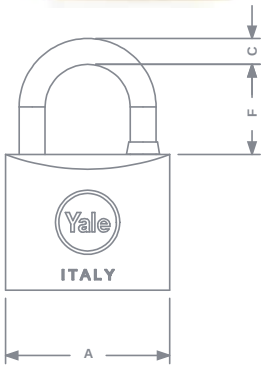

CODE	PACKAGE CODE	A	C	E	P	KEY
1100020	15-0110-2011-00-0211	20	11	4	4	01024001
1100025	15-0110-2514-00-0211	25	14	4		
1100030	15-0110-3016-00-0211	30	16	5		01010001
1100040	15-0110-4022-00-0211	40	22	6	5	01013001
1100050	15-0110-5026-00-0211	50	26	8		01008001
1100060	15-0110-6032-00-0211	60	32	10		
1100070	15-0110-7037-00-0211	70	37	12	6	01006001
1100020080	15-0110-2011-00-0201	20	11	4	4	01024001
1100025080	15-0110-2514-00-0201	25	14	4		
1100030080	15-0110-3016-00-0201	30	16	5		01010001
1100040080	15-0110-4022-00-0201	40	22	6	5	01013001
1100050080	15-0110-5026-00-0201	50	26	8		01008001
1100060080	15-0110-6032-00-0201	60	32	10		

SKU	DESCRIPTION	UOM	FIN	MAT	PKG	WGT
15-0110-2011-00-0211	110 Series, Brass, Padlock 20mm, Box Brass	PC	BRASS	BRASS	BOX	45
15-0110-2514-00-0211	110 Series, Brass, Padlock 25mm, Box Brass	PC	BRASS	BRASS	BOX	51
15-0110-3016-00-0211	110 Series, Brass, Padlock 30mm, Box Brass	PC	BRASS	BRASS	BOX	91
15-0110-4022-00-0211	110 Series, Brass, Padlock 40mm, Box Brass	PC	BRASS	BRASS	BOX	150
15-0110-5026-00-0211	110 Series, Brass, Padlock 50mm, Box Brass	PC	BRASS	BRASS	BOX	280
15-0110-6032-00-0211	110 Series, Brass, Padlock 60mm, Box Brass	PC	BRASS	BRASS	BOX	400
15-0110-7037-00-0211	110 Series, Brass, Padlock 70mm, Box Brass	PC	BRASS	BRASS	BOX	635
15-0110-2011-00-0201	110 Series, Brass, Padlock 20mm 6, Blister Brass	PC	BRASS	BRASS	BLISTER	71
15-0110-2514-00-0201	110 Series, Brass, Padlock 25mm 6, Blister Brass	PC	BRASS	BRASS	BLISTER	83
15-0110-3016-00-0201	110 Series, Brass, Padlock 30mm 6, Blister Brass	PC	BRASS	BRASS	BLISTER	120
15-0110-4022-00-0201	110 Series, Brass, Padlock 40mm 6, Blister Brass	PC	BRASS	BRASS	BLISTER	180
15-0110-5026-00-0201	110 Series, Brass, Padlock 50mm 1, Blister Brass	PC	BRASS	BRASS	BLISTER	315
15-0110-6032-00-0201	110 Series, Brass, Padlock 60mm 6, Blister Brass	PC	BRASS	BRASS	BLISTER	460
15-0110-7037-00-0201	110 Series, Brass, Padlock 70mm 6, Blister Brass	PC	BRASS	BRASS	BLISTER	670

Brass padlocks
113 Series

Specifications:
- Key can be removed with padlock open or closed

Features:
- Solid brass body
- Long, hardened chrome-plated steel shackle
- 2 nickel-plated brass keys
- Double locking shackle > mm 30
- Available in box and blister pack

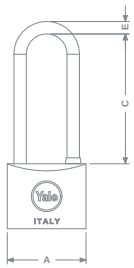

CODE	PACKAGE CODE	A	C	E	P	KEY
1130025	15-0110-2523-00-0211	25	28	4	4	01024001
1130030	15-0110-3040-00-0211	30	40	5		01010001
1130040	15-0110-4066-00-0211	40	66	6	5	01013001
1130050	15-0110-5091-00-0211	50	91	8		01008001
1130060	15-0110-6123-00-0211	60	128	10		
1130025080	15-0110-2523-00-0201	25	28	4	4	
1130030080	15-0110-3040-00-0201	30	40	5		01010001
1130040080	15-0110-4066-00-0201	40	66	6	5	01013001
1130050080	15-0110-5091-00-0201	50	91	8		01008001
1130060080	15-0110-6123-00-0201	60	128	10		

SKU	DESCRIPTION	UOM	FIN	MAT	PKG	WGT
15-0110-2528-00-0211	113 Series, Brass, Padlock 25mm, Box Brass	PC	BRASS	BRASS	BOX	64
15-0110-3040-00-0211	113 Series, Brass, Padlock 30mm, Box Brass	PC	BRASS	BRASS	BOX	99
15-0110-4066-00-0211	113 Series, Brass, Padlock 40mm, Box Brass	PC	BRASS	BRASS	BOX	167
15-0110-5091-00-0211	113 Series, Brass, Padlock 50mm, Box Brass	PC	BRASS	BRASS	BOX	325
15-0110-6128-00-0211	113 Series, Brass, Padlock 60mm, Box Brass	PC	BRASS	BRASS	BOX	520
15-0110-2528-00-0201	113 Series, Brass, Padlock 25mm, Blister Brass	PC	BRASS	BRASS	BLISTER	95
15-0110-3040-00-0201	113 Series, Brass, Padlock 30mm, Blister Brass	PC	BRASS	BRASS	BLISTER	140
15-0110-4066-00-0201	113 Series, Brass, Padlock 40mm, Blister Brass	PC	BRASS	BRASS	BLISTER	200
15-0110-5091-00-0201	113 Series, Brass, Padlock 50mm, Blister Brass	PC	BRASS	BRASS	BLISTER	370
15-0110-6128-00-0201	113 Series, Brass, Padlock 60mm, Blister Brass	PC	BRASS	BRASS	BLISTER	520

Brass padlocks
114 Series

Specifications:
- Marine padlock
- Key can be removed with padlock open or closed
- Anticorrosion padlock for wet conditions

Features:
- Nickel-plated brass body
- Stainless steel shackle
- 2 nickel-plated brass keys
- Available in blister (KD)

CODE	A	B	C	D	E	P	KEY
Y114/50/111/1	50	46	12	20	8	5	01013001
Y114/60/114/1	60	50	15	26	9		
Y114/70/113/1	70	56	13	32	10		01008001
Y114/80/118/1	80	64	19	36	13		
¥114/90/127 /1	90	73	27	41	13		

SKU	DESCRIPTION	UOM	FIN	MAT	PKG	WGT
1140030	114 Series, Brass, padlock 30mm, Box Chrome	PC	CHROME	BRASS	BOX	80
1140040	114 Series, Brass, padlock 40mm, Box Chrome	PC	CHROME	BRASS	BOX	150
1140050	114 Series, Brass, padlock 50mm, Box Chrome	PC	CHROME	BRASS	BOX	270
1140030080	114 Series, Brass, padlock 30mm, Blister Chrome	PC	CHROME	BRASS	BLISTER	90
1140040080	114 Series, Brass, padlock 40mm, Blister Chrome	PC	CHROME	BRASS	BLISTER	160
1140050080	114 Series, Brass, padlock 50mm, Blister Chrome	PC	CHROME	BRASS	BLISTER	280

Armoured padlocks
160ME Series

Specifications:
- Key can be removed with padlock open or closed
- Armoured padlock with drill resistant steel guard

Features:
- Solid brass body
- Hardened chrome-plated steel cover and locking bar
- 3 nickel-plated brass keys
- Available in box and blister pack

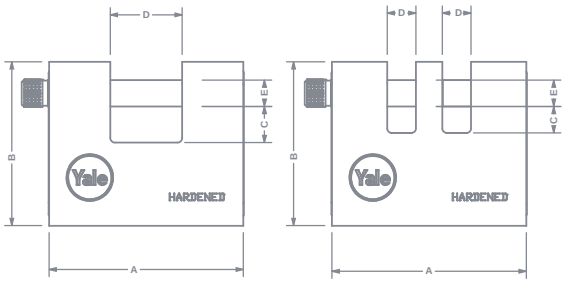

CODE	A	B	C	D	E	P	KEY
160ME60	62	55	12	22	10	5	01008001
160ME80	82	69	14	30	11		
160ME90	91	75	17	36	12		
160ME82	81	69	10	12	11		
160ME92	91	75	12	15	12		

SKU	DESCRIPTION	UOM	FIN	MAT	PKG	WGT
160ME60	160ME Series, Armoured padlock 62mm, Box Nickel	PC	NICKEL	BRASS	BOX	500
160ME80	160ME Series, Armoured padlock 82mm, Box Nickel	PC	NICKEL	BRASS	BOX	815
160ME90	160ME Series, Armoured padlock 91mm, Box Nickel	PC	NICKEL	BRASS	BOX	970
160ME82	160ME Series, Armoured padlock 81mm, Box Nickel	PC	NICKEL	BRASS	BOX	1050
160ME92	160ME Series, Armoured padlock 91mm, Box Nickel	PC	NICKEL	BRASS	BOX	1275
160ME60080	160ME Series, Armoured padlock 62mm, Blister Nickel	PC	NICKEL	BRASS	BLISTER	520
160ME80080	160ME Series, Armoured padlock 82mm, Blister Nickel	PC	NICKEL	BRASS	BLISTER	840
160ME90080	160ME Series, Armoured padlock 91mm, Blister Nickel	PC	NICKEL	BRASS	BLISTER	1000
160ME82080	160ME Series, Armoured padlock 81mm, Blister Nickel	PC	NICKEL	BRASS	BLISTER	1080
160ME92080	160ME Series, Armoured padlock 91mm, Blister Nickel	PC	NICKEL	BRASS	BLISTER	1310

Armoured padlocks
164 Series

Specifications:
- Key can be removed with padlock open or closed

Features:
- Solid brass body
- Hardened chrome-plated steel cover
- Hardened chrome-plated steel locking bar
- 3 nickel-plated brass keys
- Available in box pack

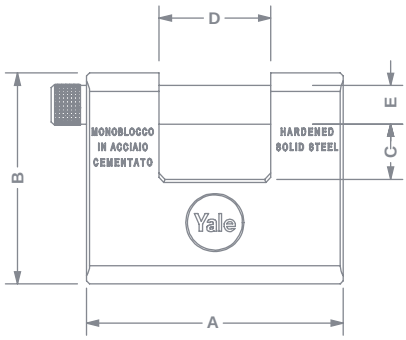

CODE	A	B	C	D	E	P	KEY
1640185	84	69	18	36.5	12.7	6	016C106

SKU	DESCRIPTION	UOM	FIN	MAT	PKG	WGT
1640185	164ME Series, Armoured padlock 84mm, Box Nickel	PC	NICKEL	BRASS	BOX	1050

Commercial padlocks
830-831 Series

Specifications:
- Bronze weatherproof padlock
- Snaplocking, key to unlock, 2 point self locking arrangement

Features:
- Key retention when the padlock is unlocked
- Non-key retaining available on request
- Steel (830) or bronze (831) sprung shackle
- Bronze material ideal for use in anti-sparking enviroment
- Available in box pack

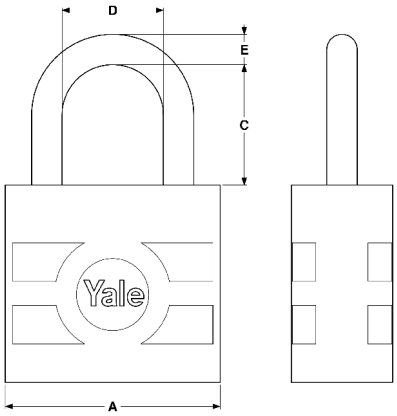

CODE	A	B	C	D	E	F
830	44.5mm	41mm	25mm	6.3mm	21mm	20mm
831	44.5mm	41mm	25mm	6.3mm	21mm	20mm

SKU	DESCRIPTION	UOM	FIN	MAT	PKG	WGT
690083001027	830 Series, Steel shackle padlock 44.5mm, Box Bronze	PC	BRONZE	BRASS	BOX	250
690083101027	831 Series, Bronze shackle padlock 44.5mm, Box Bronze	PC	BRONZE	BRASS	BOX	250

Commercial padlocks
L850 Series

Specifications:
- Bronze weatherproof padlock
- Snaplocking, key to unlock, 2 point self locking arrangement

Features:
- Key retention when the padlock is unlocked
- Non-key retaining available on request
- Hardened steel or bronze sprung shackle
- Bronze material ideal for use in anti-sparking enviroment
- Key blank
- Available in box pack
- Special executions available (KA and MK) on demand

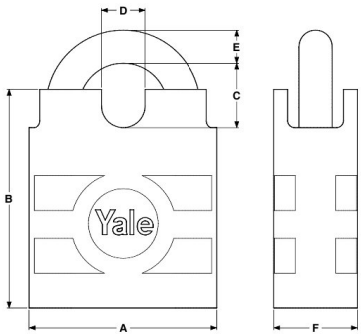

CODE	A	B	C	D	E	F
L850	63mm	54mm	19mm	9.5mm	24mm	12.5mm

SKU	DESCRIPTION	UOM	FIN	MAT	PKG	WGT
690085048027	L850 Series, Bronze weatherproof padlock 63mm, Box Bronze	PC	BRONZE	BRASS	BOX	300

Commercial padlocks

840-850-850LS-851-870-871 Series

Specifications:

- Bronze weatherproof padlock
- Open shackle bronze padlock for use on maximum security applications
- Snaplocking, key to unlock, 2 point self locking arrangement

Features:

- Key retention when the padlock is unlocked
- Fully recyclable 6 pin cylinder
- Sprung loaded shackle
- Bronze material ideal for use in anti-sparking environment
- Available in box pack

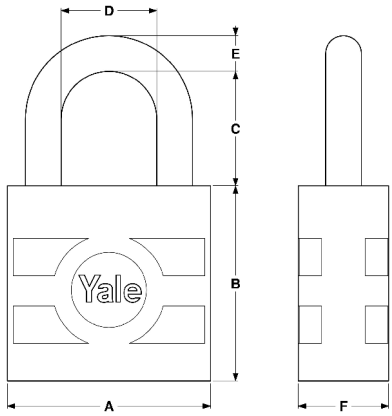

CODE	A	B	C	D	E	F
840	52mm	54mm	32mm	8mm	24mm	26.9mm
850	52mm	54mm	31mm	9.5mm	24mm	25.4mm
850LS	52mm	54mm	50mm	9.5mm	24mm	25.4mm
851	52mm	54mm	31mm	9.5mm	24mm	25.4mm
870	52mm	67mm	34mm	11mm	25.5mm	33.4mm
871	52mm	67mm	34mm	11mm	25.5mm	33.4mm

SKU	DESCRIPTION	UOM	FIN	MAT	PKG	WGT
690084001027	840Series, Weatherproof padlock 52mm, Box Bronze	PC	BRONZE	BRASS	BOX	250
690085001027	850Series, Weatherproof padlock 52mm, Box Bronze	PC	BRONZE	BRASS	BOX	250
690085048027	850LSeries, Weatherproof padlock 52mm, Box Bronze	PC	BRONZE	BRASS	BOX	250
690085101027	851Series, Weatherproof padlock 52mm, Box Bronze	PC	BRONZE	BRASS	BOX	250
690087001027	870Series, Weatherproof padlock 52mm, Box Bronze	PC	BRONZE	BRASS	BOX	250
690087101027	871Series, Weatherproof padlock 52mm, Box Bronze	PC	BRONZE	BRASS	BOX	250

Combination padlocks
Y879 Series

Specifications:
- Combination padlock with slide cover

Features:
- Zinc body with abs protective cover
- Resettable, 4 dial combination lock
- Hardened steel shackle
- Suitable for outdoor use
- Slide cover to protect combination
- Available in blister pack

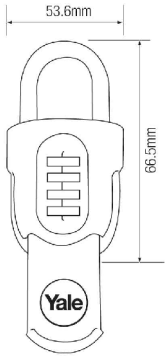

SKU	DESCRIPTION	UOM	FIN	MAT	PKG	WGT
Y879/55/130/1	Y879 Series, Combination padlock with protective slide cover, Blister Zinc	PC	SILVER/ BLACK	BRASS	BLISTER	100

Combination padlocks
Y160 Series

Specifications:
- Combination padlock

Features:
- Steel 48mm dial type padlock
- Chrome plated steel shackle
- Resettable combination padlock
- Available only in blister

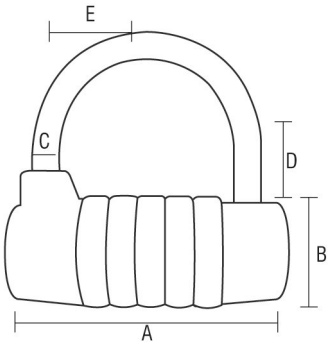

CODE	A	B	C	D	E
Y160/48/123/1	48mm	N/A	8mm	23mm	20mm

SKU	DESCRIPTION	UOM	FIN	MAT	PKG	WGT
Y160/48/123/1	Y160 Series, Steel combination padlock 48mm, Blister Stainless steel	PC	BLACK	BRASS	BLISTER	300

Combination padlocks
Y126 Series

Specifications:
- Brass combination padlock

Features:
- Steel body, brass finish
- Chrome plated steel shackle
- Resettable combination padlock using key supplied
- Available in blister pack

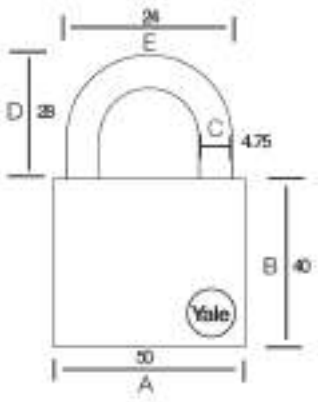

CODE	A	B	C	D	E
Y126/50/127/1	50mm	40mm	4.75mm	28mm	24mm

SKU	DESCRIPTION	UOM	FIN	MAT	PKG	WGT
Y126/50/127/1	Y126 Series, Combination padlock 50mm, Blister Stainless steel	PC	BRASS	STEEL	BLISTER	300

Standard travel padlock
YP1 Series

Specifications:
- Combination padlock

Features:
- Available in three different colours: grey (G), red (R) and yellow (Y)
- Recommended for bags and suitcases
- Available in blister pack

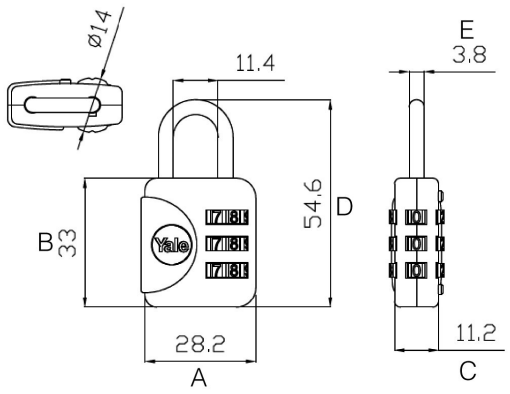

CODE	A	B	C	D	E
YP1/28/121/1G	28.2mm	33mm	11.4mm	54.6mm	3.8mm
YP1/28/121/1R	28.2mm	33mm	11.4mm	54.6mm	3.8mm
YP1/28/121/1Y	28.2mm	33mm	11.4mm	54.6mm	3.8mm

SKU	DESCRIPTION	UOM	FIN	MAT	PKG	WGT
YP1/28/121/1G	YP1 Series, Travel padlock 28mm, Blister Grey	PC	GREY	STEEL	BLISTER	5
YP1/28/121/1R	YP1 Series, Travel padlock 28mm, Blister Red	PC	RED	STEEL	BLISTER	5
YP1/28/121/1Y	YP1 Series, Travel padlock 28mm, Blister Yellow	PC	YELLOW	STEEL	BLISTER	5

Standard travel padlock
YP2 Series

Specifications:
- Combination padlock

Features:
- Available in three different colours: grey (G), red (R) and yellow (Y)
- Recommended for bags and suitcases
- Available in blister pack

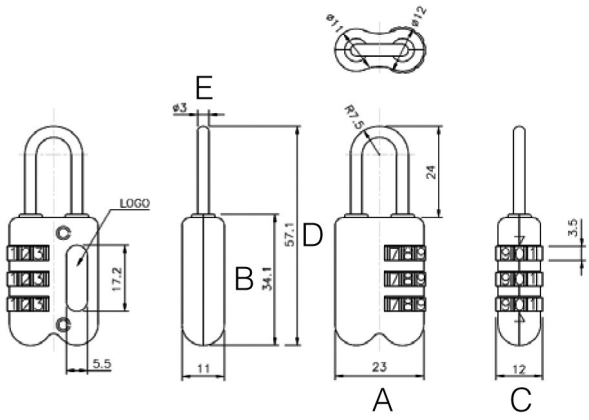

CODE	A	B	C	D	E
YP2/23/128/1G	23mm	34.1mm	12mm	57.1mm	3mm
YP2/23/128/1R	23mm	34.1mm	12mm	57.1mm	3mm
YP2/23/128/1Y	23mm	34.1mm	12mm	57.1mm	3mm

SKU	DESCRIPTION	UOM	FIN	MAT	PKG	WGT
YP2/23/128/1G	YP2 Series, Travel padlock 23mm, Blister Grey	PC	GREY	STEEL	BLISTER	5
YP2/23/128/1R	YP2 Series, Travel padlock 23mm, Blister Red	PC	RED	STEEL	BLISTER	5
YP2/23/128/1Y	YP2 Series, Travel padlock 23mm, Blister Yellow	PC	YELLOW	STEEL	BLISTER	5

Travel padlock “with TSA device”
YTI1 Series

Specifications:
- Combination padlock
- The TSA system allows airport security to examine the contents of luggage without forcing the padlock

Features:
- Zinc body
- Steel shackle (cable)
- Featured with label tag for name and address
- Recommended for bags and suitcases
- Equipped with Travel Security Administration (TSA) device
- Available in blister pack

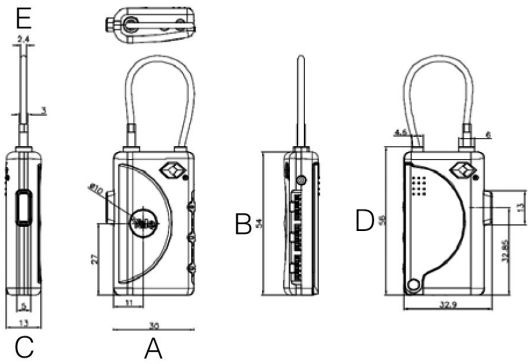

CODE	A	B	C	D	E
YTI1/30/350/1	30mm	54mm	13mm	56mm	2.4mm

SKU	DESCRIPTION	UOM	FIN	MAT	PKG	WGT
YTI1/30/350/1	YTI1 Series, TSA Travel padlock with metal cable 30mm, Blister Grey	PC	GREY	ZINC	BLISTER	5

Travel padlock “with TSA device”
YTL1 Series

Specifications:
- Combination stripe for suitcases
- The TSA system allows airport security to examine the contents of luggage without forcing the padlock

Features:
- ABS body
- Polypropylene shackle
- Available in 2 colours: grey (G) and red (R)
- Recommended for bags and suitcases
- Equipped with Travel Security Administration (TSA) device
- Index mark of inspection
- Available in blister pack

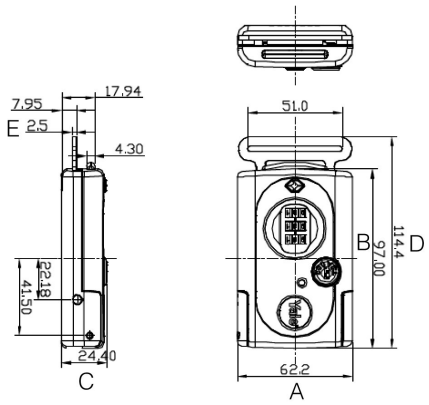

CODE	A	B	C	D	E
YTL1/62/4/1G	62.2mm	97mm	24.4mm	114.4mm	2.5mm
YTL1/62/4/1R	62.2mm	97mm	24.4mm	114.4mm	2.5mm

SKU	DESCRIPTION	UOM	FIN	MAT	PKG	WGT
YTL1/62/4/1G	YTP1 Series, Combination travel strap 62mm 6 Blister, Blister Grey	PC	GREY	ABS	BLISTER	5
YTL1/62/4/1R	YTP1 Series, Combination travel strap 62mm 6 Blister, Blister Red	PC	RED	ABS	BLISTER	5

Travel padlock “with TSA device”
YTP2 Series

Specifications:
- Combination padlock
- The TSA system allows airport security to examine the contents of luggage without forcing the padlock

Features:
- Zinc body
- Zinc shackle
- Available in 3 colours: grey (G), red (R) and yellow (Y)
- Recommended for bags and suitcases
- Travel Security Administration (TSA) device
- Available in blister pack

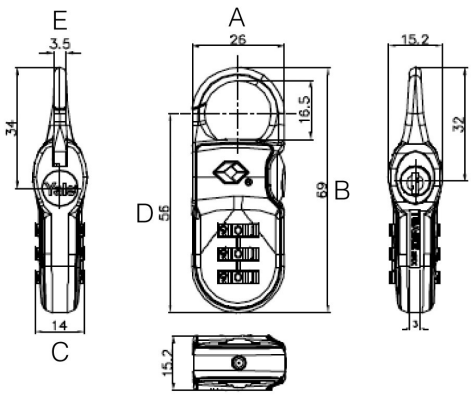

CODE	A	B	C	D	E
YTP2/26/216/1G	27mm	68mm	15mm	56mm	3.5mm
YTP2/26/216/1R	27mm	68mm	15mm	56mm	3.5mm
YTP2/26/216/1Y	27mm	68mm	15mm	56mm	3.5mm

SKU	DESCRIPTION	UOM	FIN	MAT	PKG	WGT
YTP2/26/216/1	YTP2 Series, Combination travel padlock 27mm 6, Blister Grey	PC	GREY	ZINC	BLISTER	5
YTP2/26/216/1	YTP2 Series, Combination travel padlock 27mm 6, Blister Red	PC	RED	ZINC	BLISTER	5
YTP2/26/216/1	YTP2 Series, Combination travel padlock 27mm 6, Blister Yellow	PC	YELLOW	ZINC	BLISTER	5

Mini Fashion padlocks
Novelty Series - 2B/2M/2P

Specifications:
- Combination padlock

Features:
- Zinc body
- Available in various shapes and colors
- Children padlock for girls
- Suitable for bags and sports equipment
- Resettable combination lock
- Available in blister pack

SKU	DESCRIPTION	UOM	FIN	MAT	PKG	WGT
Y-NOVELTY-2B	Novelty Series, Mini fashion padlock Blister Blue	PC	BLUE	ZINC	BLISTER	5
Y-NOVELTY-2M	Novelty Series, Mini fashion padlock Blister Magenta	PC	MAGENTA	ZINC	BLISTER	5
Y-NOVELTY-2P	Novelty Series, Mini fashion padlock Blister Pink	PC	PINK	ZINC	BLISTER	5

Mini Fashion padlocks
Novelty Series - FOOTBALL

Specifications:
- Combination padlock

Features:
- Football shape
- Children padlock for girls and boys
- Suitable for bags and sports equipment
- Resettable combination lock
- Available in blister pack

SKU	DESCRIPTION	UOM	FIN	MAT	PKG	WGT
Y-FOOTBALL	Novelty Series, Mini fashion padlock football fantasy Blister Black/White	PC	BLACK / WHITE	ZINC	BLISTER	5

Mini Fashion padlocks
Novelty Series - Heart pink

Specifications:
- Combination padlock

Features:
- Children padlock for boys and girls
- Suitable for bags and sports equipment
- Resettable combination lock
- Available in blister pack

SKU	DESCRIPTION	UOM	FIN	MAT	PKG	WGT
Y-HEART-PINK	Novelty Series, Mini fashion padlock Blister Pink	PC	PINK	ZINC	BLISTER	5

New Mini Fashion padlocks
Novelty Series - BasketBall

Specifications:
- Combination padlock

Features:
- Eye-catching basketball shape, suitable for sports backs, tote bags, personal style
- 3-digit password is reset at any time
- Lock material: zinc
- Locking ring material: steel
- Password: 3 digits

SKU	DESCRIPTION	UOM	FIN	MAT	PKG	WGT
Y-BASKETBALL	Novelty Series, BasketBall padlock Blister	PC	ORANGE	ZINC	BLISTER	5

Other padlocks and hasps
SAA5080 Personal defence

Specifications:
• The alarm is activated by pulling the lanyard

Features:
• Contain an alarm siren and useful lanyard for convenient transport
• Easy to use
• Operation battery included
• Alarm 100 dB
• Available in blister pack

SKU	DESCRIPTION	UOM	FIN	MAT	PKG	WGT
SAA5080	Alarm for personal defence Blister Purple	PC	PURPLE	ABS	BLISTER	42

Other padlocks and hasps
Y500/187/1 Series

Specifications:
• Weather resistant case, for outdoor use

Features:
• Key access padlock
• Strong die-cast body
• Resettable combination lock
• Concealed fixings for maximum security

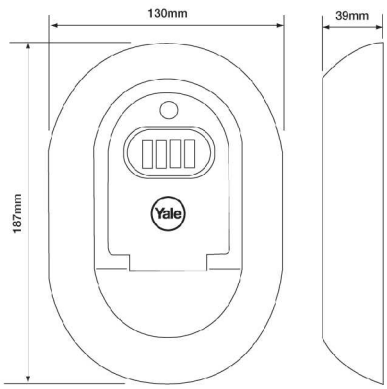

SKU	DESCRIPTION	UOM	FIN	MAT	PKG	WGT
Y500/187/1	Combination key access Blister Black	PC	SILVER BLACK	ZINC	BLISTER	300

Keys

Features:
- Brass material
- Sawn key, volume and round keyhead shape
- Dimple key, volume keyhead shape
- Cross key, round keyhead shape
- Map key, rectangular keyhead shape

SKU	DESCRIPTION	WGT
YKB110/15	Keyblank for handy padlock with cover Y110J/15/111	15
YKB110/20	Keyblank for handy brass padlock Y110/20/111	20
YKB110/25	Keyblank for handy brass padlock Y110/20/111	25
YKB110/30	Keyblank for handy brass padlock Y110/30/117	30
01014001M02	Keyblank for Global series padlock mm40 - Rectangular mm60 - Special padlock mm50 and 60	40
01014001V02	Keyblank for Global series padlock mm42,50,52,60 and 70 - Rectangular mm70	50
01014001V03	Keyblank for Global Special series padlock mm47,48,63 and 70 - High security mm95	63
01006001	Keyblank for cylinders profile cylinder NO patent and padlock mm70 - 6pins	100
01000001	Keyblank for Padlock mm30 - CAM-LOCK - 4pins	100
01013001	Keyblank for Padlock mm40 - Bayonet mm50,60 and 70 - CAM-LOCK - 5pins	100
01019001	Keyblank for Profile cylinder NO patent - 3pins	100
01009001	Keyblank for Profile cylinder NO patent and Padlock - 4pins	100
01024001	Keyblank for Padlock mm20 and 25 - CAM-LOCK - 4pins	100
01008001	Keyblank for Profile cylinder NO patent - Padlock mm50 and 60 - Bayonet mm80 and 90 - 5pins	100
0105800	Keyblank for Round cylinder for lock 9B5 series - 5pins	100
0144400	Keyblank for Wall safes - Map keyway	20
0151770	Keyblank for Cross Cylinder 270 series - 6pins	20
0160106	Keyblank for Profile cylinder NO patent 230 series - 6pins	50
016C106	Keyblank for Armoured steel padlock mm84 - 6pins	50

Panic Exit Devices

ST 3
FL.2

Surface-mounted panic exit devices

Ministar 429

Specifications:
- Reversible surface-mounted panic exit device

Features:
- For one, two or three locking points applications
- Available in black, grey, white, chrome, gold and stainless steel finish
- Bar, latches kit and vertical rods to be ordered separately
- Suitable for fire rated doors
- CE marked. In conformity with the standard EN1125
- Micro switch device available on request

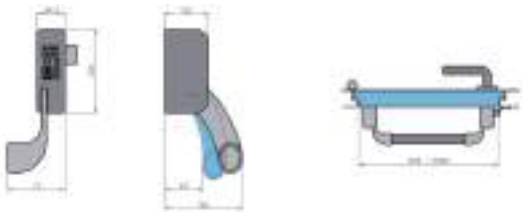

SKU	DESCRIPTION	UOM	FIN	MAT	PKG	WGT
4290060000	MiniStar 429 Series, Push Bar PED, CE, EN1125, Reversible, 1/2/3 locking points option, Black, Box	PR	BLACK	ALU	BOX	2600
429060000GR	MiniStar 429 Series, Push Bar PED, CE, EN1125, Reversible, 1/2/3 locking points option, Grey, Box	PR	GREY	ALU	BOX	2600
429060000IN	MiniStar 429 Series, Push Bar PED, CE, EN1125, Reversible, 1/2/3 locking points option, SS, Box	PR	SSM	ALU	BOX	2600
429060000WH	MiniStar 429 Series, Push Bar PED, CE, EN1125, Reversible, 1/2/3 locking points option, Black, Box	PR	BLACK	ALU	BOX	2600
429060000CR	MiniStar 429 Series, Push Bar PED, CE, EN1125, Reversible, 1/2/3 locking points option, Grey, Box	PR	GREY	ALU	BOX	2600
429060000AU	MiniStar 429 Series, Push Bar PED, CE, EN1125, Reversible, 1/2/3 locking points option, SS, Box	PR	SSM	ALU	BOX	2600

Surface-mounted panic exit devices
Millenium

Specifications:
- Reversible surface mounted panic exit device
- CE marked. In conformity with Standard EN1125

Features:
- For one, two or three locking points applications
- Suitable for single and double leaf doors (with a pillar profile of more than 55mm)
- Burglar-proof device
- Suitable for fire rated doors
- Aluminium bar
- Available in black, grey, white, gold and stainless steel (simil Inox) finish
- Bar, latches kit and vertical rods to be ordered separately
- Micro switch device available on request

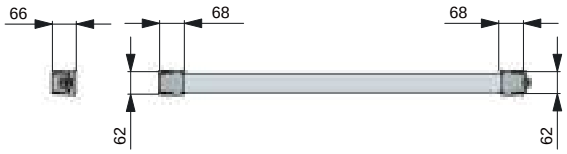

SKU	DESCRIPTION	UOM	FIN	MAT	PKG	WGT
F19700	Millenium Series, TouchPad PED, CE, EN1125, Reversible, 1/2/3 locking points option, Black, Box	SET	BLACK	ALU, STL	BOX	1600
F19700/GR	Millenium Series, TouchPad PED, CE, EN1125, Reversible, 1/2/3 locking points option, Grey, Box	SET	GREY	ALU, STL	BOX	1600
F19700/WH	Millenium Series, TouchPad PED, CE, EN1125, Reversible, 1/2/3 locking points option, White, Box	SET	WHITE	ALU, STL	BOX	1600
F19700/AU	Millenium Series, TouchPad PED, CE, EN1125, Reversible, 1/2/3 locking points option, Gold, Box	SET	GOLD	ALU, STL	BOX	1600
F19700/IN	Millenium Series, TouchPad PED, CE, EN1125, Reversible, 1/2/3 locking points option, SS, Box	SET	SSM	ALU, STL	BOX	1600

Surface-mounted panic exit devices
Push 445

Specifications:
- Reversible, surface-mounted push bar handle
- Standard version with the cover in black painted steel and red horizontal bar

Features:
- Suitable for 400 to 1310mm wide doors
- Adjustment 150-460mm
- For one, two or three locking points applications
- Latches kit and vertical rods to be ordered separately
- Suitable for fire rated doors
- CE marked. In conformity with the standard 1125

*For the special finishes add at the end of the below codes:
- GR = Grey painted
- IN = Stainless steel finish
- SC = Chrome

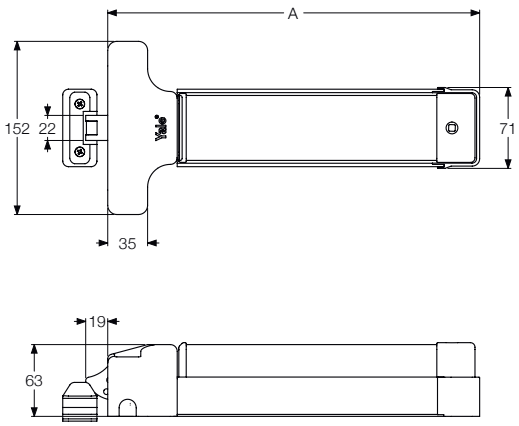

SKU	DESCRIPTION	UOM	FIN	MAT	PKG	WGT
445Y532000	TouchPad 445 Series PED, CE, EN1125, Reversible, 1/2/3 locking points option, 32mm, Black/Red, Box	SET	BLACK/ RED	ALU	BOX	2260
445Y564000	TouchPad 445 Series PED, CE, EN1125, Reversible, 1/2/3 locking points option, 640mm, Black/Red, Box	SET	BLACK/ RED	ALU	BOX	3380
445Y584000	TouchPad 445 Series PED, CE, EN1125, Reversible, 1/2/3 locking points option, 840mm, Black/Red, Box	SET	BLACK/ RED	ALU	BOX	3700
445Y511000	TouchPad 445 Series PED, CE, EN1125, Reversible, 1/2/3 locking points option, 1140mm, Black/Red, Box	SET	BLACK/ RED	ALU	BOX	5000
445Y512000	TouchPad 445 Series PED, CE, EN1125, Reversible, 1/2/3 locking points option, 1200mm, Black/Red, Box	SET	BLACK/ RED	ALU	BOX	5500
445Y513000	TouchPad 445 Series PED, CE, EN1125, Reversible, 1/2/3 locking points option, 1300mm, Black/Red, Box	SET	BLACK/ RED	ALU	BOX	6000

Accessories for panic exit devices
Bars for Ministar 429

Specifications:
- Oval bar

SKU	DESCRIPTION	UOM	FIN	MAT	PKG	WGT
PAM26000100	Oval bar for MiniStar 429 PushBar PED, 900mm, Silv Anodized, Box	PC	SLV ANZ	ALU	BOX	470
PAM26000200	Oval bar for MiniStar 429 PushBar PED, 1200mm, Silv Anodized, Box	PC	SLV ANZ	ALU	BOX	824
PAM26000300	Oval bar for MiniStar 429 PushBar PED, 1500mm, Silv Anodized, Box	PC	SLV ANZ	ALU	BOX	1180

Accessories for panic exit devices
Bars for Ministar 429

SKU	DESCRIPTION	UOM	FIN	MAT	PKG	WGT
PAM26000101	Oval bar for MiniStar 429 PushBar PED, 900mm, SSM, Box	PC	SLV ANZ	ALU	BOX	470
PAM26000201	Oval bar for MiniStar 429 PushBar PED, 1200mm, SSM, Box	PC	SLV ANZ	ALU	BOX	824
PAM26000301	Oval bar for MiniStar 429 PushBar PED, 1500mm, SSM, Box	PC	SLV ANZ	ALU	BOX	1180
PAM26000114	Oval bar for MiniStar 429 PushBar PED, 900mm, Red, Box	PC	RED	ALU	BOX	470
PAM26000214	Oval bar for MiniStar 429 PushBar PED, 1200mm, Red, Box	PC	RED	ALU	BOX	824
PAM26000314	Oval bar for MiniStar 429 PushBar PED, 1500mm, Red, Box	PC	RED	ALU	BOX	1180
PAM26000117	Oval bar for MiniStar 429 PushBar PED, 900mm, Grey, Box	PC	GREY	ALU	BOX	470
PAM26000217	Oval bar for MiniStar 429 PushBar PED, 1200mm, Grey, Box	PC	GREY	ALU	BOX	824
PAM26000317	Oval bar for MiniStar 429 PushBar PED, 1500mm, Grey, Box	PC	GREY	ALU	BOX	1180
PAM26000110	Oval bar for MiniStar 429 PushBar PED, 900mm, SSP, Box	PC	SSP	ALU	BOX	470
PAM26000210	Oval bar for MiniStar 429 PushBar PED, 1200mm, SSP, Box	PC	SSP	ALU	BOX	824
PAM26000310	Oval bar for MiniStar 429 PushBar PED, 1500mm, SSP, Box	PC	SSP	ALU	BOX	1180

Accessories for panic exit devices
Side and vertical locking latches kit

Features:
- Suitable for Ministar 429 and Push 445

SKU	DESCRIPTION	UOM	FIN	MAT	PKG	WGT
0342900Y00	Vertical locking latches kit with strike plates, for 429 & 445 series, Black, Box	PC	BLACK	ALU	BOX	1000
0342900Y50	Vertical locking latches kit with strike plates, for 429 & 445 series, Black, Box	PC	BLACK	ALU	BOX	1000
0342900Y00GR	Vertical locking latches kit with strike plates, for 429 & 445 series, Grey, Box	PC	GREY	ALU	BOX	1000
0342900Y50GR	Vertical locking latches kit with strike plates, for 429 & 445 series, Grey, Box	PC	GREY	ALU	BOX	1000
0342900Y00IN	Vertical locking latches kit with strike plates, for 429 & 445 series, SSM, Box	PC	SSM	ALU	BOX	1000
0342900Y50IN	Vertical locking latches kit with strike plates, for 429 & 445 series, SSM, Box	PC	SSM	ALU	BOX	1000
0342900Y00CR	Vertical locking latches kit with strike plates, for 429 & 445 series, Polish Chrome, Box	PC	POLISH CHROME	ALU	BOX	1000
0342900Y50CR	Vertical locking latches kit with strike plates, for 429 & 445 series, Polish Chrome, Box	PC	POLISH CHROME	ALU	BOX	1000
0342900Y00AU	Vertical locking latches kit with strike plates, for 429 & 445 series, Gold, Box	PC	GOLD	ALU	BOX	1000
0342900Y50AU	Vertical locking latches kit with strike plates, for 429 & 445 series, Gold, Box	PC	GOLD	ALU	BOX	1000
0342900Y00SC	Vertical locking latches kit with strike plates, for 429 & 445 series, Sating Chrom, Box	PC	SC	ALU	BOX	1000
0342900Y50SC	Vertical locking latches kit with strike plates, for 429 & 445 series, Sating Chrom, Box	PC	SC	ALU	BOX	1000
0342900Y00WH	Vertical locking latches kit with strike plates, for 429 & 445 series, White, Box	PC	WHITE	ALU	BOX	1000
0342900Y50WH	Vertical locking latches kit with strike plates, for 429 & 445 series, White, Box	PC	WHITE	ALU	BOX	1000

Accessories for panic exit devices
Jolly handle kit with cylinder

Specifications:
- External Rim handle Kit with cylinder included
- Panic exit bar can be operated externally by the handle. The cylinder locks/ unlocks the handle

Features:
- Suitable for Push 455, Star 464 panic exit devices
- Black and stainless steel finishes available

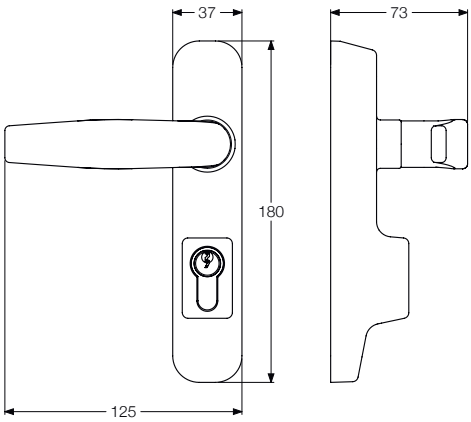

SKU	DESCRIPTION	UOM	FIN	MAT	PKG	WGT
04480Y8000	Jolly handle kit with cylinder, for 445 & 464 series, Black, Box	PC	BLACK	ALU, STL	BOX	1100
04480Y8000IN	Jolly handle kit with cylinder, for 445 & 464 series, SSM, Box	PC	SSM	ALU, STL	BOX	1100
04480Y8000GR	Jolly handle kit with cylinder, for 445 & 464 series, Grey, Box	PC	GREY	ALU, STL	BOX	1100
04480Y8000WH	Jolly handle kit with cylinder, for 445 & 464 series, White, Box	PC	WHITE	ALU, STL	BOX	1100
04480Y8000CR	Jolly handle kit with cylinder, for 445 & 464 series, Satin Chrome, Box	PC	SC	ALU, STL	BOX	1100
04480Y8000AU	Jolly handle kit with cylinder, for 445 & 464 series, Gold, Box	PC	GOLD	ALU, STL	BOX	1100

Accessories for panic exit devices
Vertical rods kit with covers

Specifications:
- Vertical Rods kit with covers

Features:
- Suitable for Ministar 429 panic exit devices

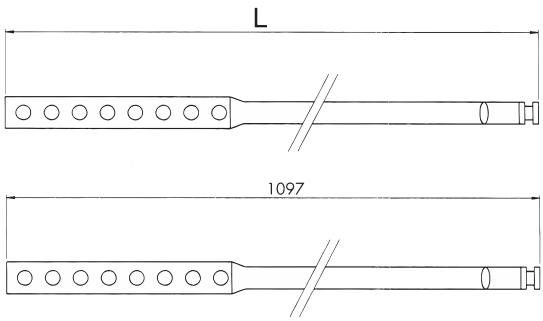

Accessories for panic exit devices

Vertical rods kit with covers

SKU	DESCRIPTION	UOM	FIN	MAT	PKG	WGT
0444400Y00	Vertical locking rod with covers, for 429 series, 1162mm, Black, Box	SET	BLAC	ALU, STL	BOX	1000
0444400Y00IN	Vertical locking rod with covers, for 429 series, 1162mm, SSM, Box	SET	SSM	ALU, STL	BOX	1000
0444400Y00GR	Vertical locking rod with covers, for 429 series, 1162mm, Grey, Box	SET	GREY	ALU, STL	BOX	1000
0444400Y00WH	Vertical locking rod with covers, for 429 series, 1162mm, White, Box	SET	WHITE	ALU, STL	BOX	1000
0444400Y00CR	Vertical locking rod with covers, for 429 series, 1162mm, Polish Chrome, Box	SET	POLSH	ALU, STL	BOX	1000
0444400Y00AU	Vertical locking rod with covers, for 429 series, 1162mm, Gold, Box	SET	GOLD	ALU, STL	BOX	1000
0444401Y00V	Vertical locking rod with covers, for 429 series, 1362mm, Black, Box	SET	BLACK	ALU, STL	BOX	1310
0444401Y00IN	Vertical locking rod with covers, for 429 series, 1362mm, SSM, Box	SET	SSM	ALU, STL	BOX	1310
0444401Y00GR	Vertical locking rod with covers, for 429 series, 1362mm, Grey, Box	SET	GREY	ALU, STL	BOX	1310
0444401Y00WH	Vertical locking rod with covers, for 429 series, 1362mm, White, Box	SET	WHITE	ALU, STL	BOX	1310
0444401Y00CR	Vertical locking rod with covers, for 429 series, 1362mm, Polish Chrome, Box	SET	POLISH CHROME	ALU, STL	BOX	1310
0444401Y00AU	Vertical locking rod with covers, for 429 series, 1362mm, Gold, Box	SET	GOLD	ALU, STL	BOX	1310
0444402Y00V	Vertical locking rod with covers, for 429 series, 1562mm, Black, Box	SET	BLACK	ALU, STL	BOX	1400
0444402Y00GR	Vertical locking rod with covers, for 429 series, 1562mm, SSM, Box	SET	SSM	ALU, STL	BOX	1400
0444402Y00IN	Vertical locking rod with covers, for 429 series, 1562mm, Grey, Box	SET	GREY	ALU, STL	BOX	1400
0444402Y00WH	Vertical locking rod with covers, for 429 series, 1562mm, White, Box	SET	WHITE	ALU, STL	BOX	1400
0444402Y00CR	Vertical locking rod with covers, for 429 series, 1562mm, Polish Chrome, Box	SET	POLISH CHROME	ALU, STL	BOX	1400
0444402Y00AU	Vertical locking rod with covers, for 429 series, 1562mm, Gold, Box	SET	GOLD	ALU, STL	BOX	1400
0444403Y00V	Vertical locking rod with covers, for 429 series, 1762mm, Black, Box	SET	BLACK	ALU, STL	BOX	1490
0444403Y00IN	Vertical locking rod with covers, for 429 series, 1762mm, SSM, Box	SET	SSM	ALU, STL	BOX	1490
0444403Y00WH	Vertical locking rod with covers, for 429 series, 1762mm, Grey, Box	SET	GREY	ALU, STL	BOX	1490
0444403Y00CR	Vertical locking rod with covers, for 429 series, 1762mm, White, Box	SET	WHITE	ALU, STL	BOX	1490
0444403Y00GR	Vertical locking rod with covers, for 429 series, 1762mm, Polish Chrome, Box	SET	POLISH CHROME	ALU, STL	BOX	1490
0444403Y00AU	Vertical locking rod with covers, for 429 series, 1762mm, Gold, Box	SET	GOLD	ALU, STL	BOX	1490
0444404Y00V	Vertical locking rod with covers, for 429 series, 1962mm, Black, Box	SET	BLACK	ALU, STL	BOX	1690
0444404Y00IN	Vertical locking rod with covers, for 429 series, 1962mm, SSM, Box	SET	SSM	ALU, STL	BOX	1690
0444404Y00WH	Vertical locking rod with covers, for 429 series, 1962mm, Grey, Box	SET	GREY	ALU, STL	BOX	1690
0444404Y00CR	Vertical locking rod with covers, for 429 series, 1962mm, White, Box	SET	WHITE	ALU, STL	BOX	1690
0444404Y00AU	Vertical locking rod with covers, for 429 series, 1962mm, Polish Chrome, Box	SET	POLISH CHROME	ALU, STL	BOX	1690
0444404Y00GR	Vertical locking rod with covers, for 429 series, 1962mm, Gold, Box	SET	GOLD	ALU, STL	BOX	1690

Accessories for panic exit devices

Bars for Millenium

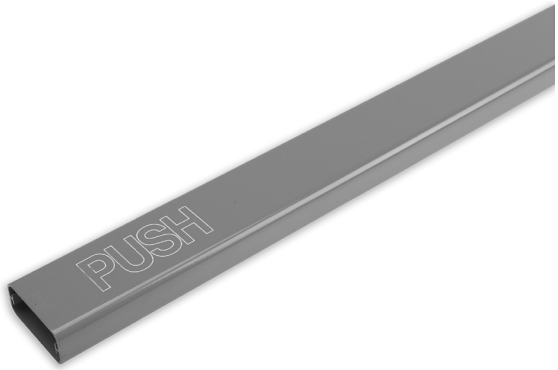

SKU	DESCRIPTION	UOM	FIN	MAT	PKG	WGT
F19309/AR	Bars for Millenium 429 Series, 900mm, Sliver, Box	PC	SILVER	ALU, STL	BOX	1110
F19309/N	Bars for Millenium 429 Series, 900mm, Black, Box	PC	BLACK	ALU, STL	BOX	1110
F19309/R	Bars for Millenium 429 Series, 900mm, Red, Box	PC	RED	ALU, STL	BOX	1110
F19309/WH	Bars for Millenium 429 Series, 900mm, White, Box	PC	WHITE	ALU, STL	BOX	1110
F19309/AU	Bars for Millenium 429 Series, 900mm, Gold, Box	PC	GOLD	ALU, STL	BOX	1110
F19309/IN	Bars for Millenium 429 Series, 900mm, Satin Nickel, Box	PC	SN	ALU, STL	BOX	1344
F19310/AR	Bars for Millenium 429 Series, 1200mm, Sliver, Box	PC	SILVER	ALU, STL	BOX	1344
F19310/N	Bars for Millenium 429 Series, 1200mm, Black, Box	PC	BLACK	ALU, STL	BOX	1344
F19310/R	Bars for Millenium 429 Series, 1200mm, Red, Box	PC	RED	ALU, STL	BOX	1344
F19310/WH	Bars for Millenium 429 Series, 1200mm, White, Box	PC	WHITE	ALU, STL	BOX	1344
F19310/AU	Bars for Millenium 429 Series, 1200mm, Gold, Box	PC	GOLD	ALU, STL	BOX	1344
F19310/IN	Bars for Millenium 429 Series, 1200mm, Satin Nickel, Box	PC	SN	ALU, STL	BOX	1644
F19312/AR	Bars for Millenium 429 Series, 1500mm, Sliver, Box	PC	SILVER	ALU, STL	BOX	1644
F19312/N	Bars for Millenium 429 Series, 1500mm, Black, Box	PC	BLACK	ALU, STL	BOX	1644
F19312/R	Bars for Millenium 429 Series, 1500mm, Red, Box	PC	RED	ALU, STL	BOX	1644
F19312/WH	Bars for Millenium 429 Series, 1500mm, White, Box	PC	WHITE	ALU, STL	BOX	1644
F19312/AU	Bars for Millenium 429 Series, 1500mm, Gold, Box	PC	GOLD	ALU, STL	BOX	1644
F19312/IN	Bars for Millenium 429 Series, 1500mm, Satin Nickel, Box	PC	SN	ALU, STL	BOX	1644

Accessories for panic exit devices
Handles for Millenium

Specifications:
- Available with horizontal or vertical grip

Features:
- Micro-switch version available on request. To order it, add “MIC” at the end of the code
- Special finishes available on request

SKU	DESCRIPTION	UOM	FIN	MAT	PKG	WGT
F19720	Horizontal grip for PED, Black, Box	PC	BLACK	ALU, STL	BOX	1300
F19720/GR	Horizontal grip for PED, Grey, Box	PC	GREY	ALU, STL	BOX	1300
F19720/WH	Horizontal grip for PED, White, Box	PC	WHITE	ALU, STL	BOX	1300
F19720/AU	Horizontal grip for PED, Gold, Box	PC	GOLD	ALU, STL	BOX	1300
F19720/IN	Horizontal grip for PED, Satin Nickel, Box	PC	SN	ALU, STL	BOX	1300

Accessories for panic exit devices
Latches kit with cover bars

Specifications:
- Suitable for Millenium panic exit device

SKU	DESCRIPTION	UOM	FIN	MAT	PKG	WGT
F9840NEW	Vertical top/bottom with cover, for Millenium PED series, Black, Box	PR	BLACK	ALU, STL	BOX	2700
F9840/GRNEW	Vertical top/bottom with cover, for Millenium PED series, Grey, Box	PR	GREY	ALU, STL	BOX	2700
F9840/WHNEW	Vertical top/bottom with cover, for Millenium PED series, White, Box	PR	WHITE	ALU, STL	BOX	2700
F9840/AUNEW	Vertical top/bottom with cover, for Millenium PED series, Gold, Box	PR	GOLD	ALU, STL	BOX	2700
F9840/INNEW	Vertical top/bottom with cover, for Millenium PED series, Satin Nickel, Box	PR	SN	ALU, STL	BOX	2700
F9841NEW	Vertical top/bottom with cover, for Millenium PED series, Black, Box	PR	BLACK	ALU, STL	BOX	2700
F9841/GRNEW	Vertical top/bottom with cover, for Millenium PED series, Grey, Box	PR	GREY	ALU, STL	BOX	2700
F9841/WHNEW	Vertical top/bottom with cover, for Millenium PED series, White, Box	PR	WHITE	ALU, STL	BOX	2700
F9841/AUNEW	Vertical top/bottom with cover, for Millenium PED series, Gold, Box	PR	GOLD	ALU, STL	BOX	2700
F9841/INNEW	Vertical top/bottom with cover, for Millenium PED series, Satin Nickel, Box	PR	SN	ALU, STL	BOX	2700

Door Accesories

Door stops
Floor mounted door stop

Specifications:
- AISI 304 with rubber cushion
- Height 26.5mm x Ø44mm, 3mm rubber
- Anchor pin and screw for floor fixing

Features:
- Satin finish, other finishes available on request

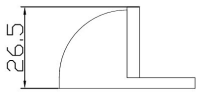

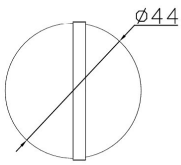

SKU	DESCRIPTION	UOM	FIN	MAT	PKG	WGT
35-9004-1001-00-31-50	Half moon Floor mounted, SS 304, SSM, Box	PC	SSM	SS 304	BOX	160

Door stops
Floor mounted door stop - Cylindrical

Specifications:
- AISI 304 with rubber cushion
- Height 40mm x Ø29mm, 3mm rubber
- Anchor pin and screw for floor fixing

Features:
- Satin finish, other finishes available on request

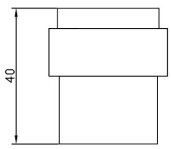

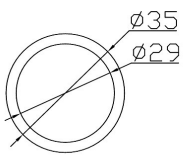

SKU	DESCRIPTION	UOM	FIN	MAT	PKG	WGT
35-9004-1002-00-31-50	CylindricalFloor mounted, SS 304, SSM, Box	PC	SSM	SS 304	BOX	160

Door stops

Wall mounted door stop

Specifications:
- AISI 304 with rubber cushion
- Base Ø50x6mm
- Total length with base and rubber 82mm, Ø19mm
- Concealed screw fixing

Features:
- Satin finish, other finishes available on request

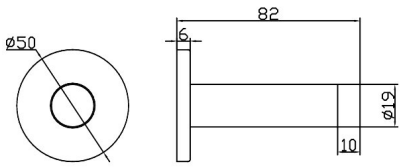

SKU	DESCRIPTION	UOM	FIN	MAT	PKG	WGT
35-9004-1011-00-31-50	Wall mounteddoor stop, SS 304, SSM, Box	PC	SSM	SS 304	BOX	160

Flush bolts

Flush bolt for metal doors - Rod type

Specifications:
- Stainless steel AISI 304
- Lever operation
- Length options 203mm and 304mm, Bolt Ø12mm x 55mm

Features:
- Satin finish, other finishes on request

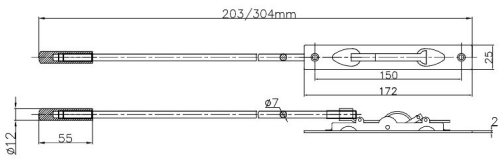

SKU	DESCRIPTION	UOM	FIN	MAT	PKG	WGT
35-9004-3001-08-31-50	Flush bolt for metal door rod type, push & slide operation, 200mm, Bolt dia 12mm, SSM, Box	PC	SSM	SS 304	BOX	180
35-9004-3001-12-31-50	Flush bolt for metal door rod type, push & slide operation, 300mm, Bolt dia 12mm, SSM, Box	PC	SSM	SS 304	BOX	180

Flush bolts
Flush bolt for metal doors

Specifications:
- Stainless steel AISI 304
- Push and slide operation
- Length options 200mm and 300mm, Bolt Ø12mm

Features:
- Satin finish, other finishes on request

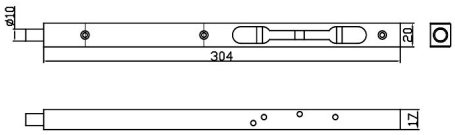

SKU	DESCRIPTION	UOM	FIN	MAT	PKG	WGT
35-9004-3002-08-31-50	Flush bolt for metal door 200mm, SSM, Box	PC	SSM	SS 304	BOX	160
35-9004-3002-12-31-50	Flush bolt for metal door 300mm, SSM, Box	PC	SSM	SS 304	BOX	160

Flush bolts
Flush bolt for wooden doors

Specifications:
- Stainless steel AISI 304
- Box type casing with lever operation
- Length options 200mm and 300mm, Bolt Ø10mm

Features:
- Satin finish, other finishes on request

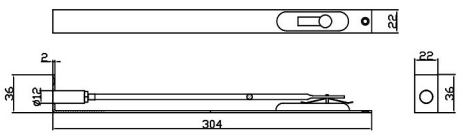

SKU	DESCRIPTION	UOM	FIN	MAT	PKG	WGT
35-9004-3003-08-31-50	Flush bolt for wooden door 200mm, SSM, Box	PC	SSM	SS 304	BOX	160
35-9004-3003-12-31-50	Flush bolt for wooden door 300mm, SSM, Box	PC	SSM	SS 304	BOX	160

Signage and plates
Circular instruction signage

Specifications:
- "PUSH" and "PULL" circular signs
- Stainless steel AISI 304
- Size Ø76 x 1.5mm
- Engraved and painted

Features:
- Satin finish, other finishes available on request

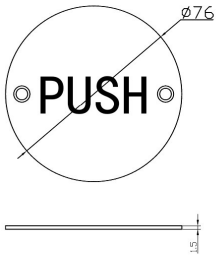

SKU	DESCRIPTION	UOM	FIN	MAT	PKG	WGT
35-9004-2011-00-31-50	Signage, Circular plate - PUSH, SS 304, Box	PC	SSM	SS 304	BOX	50
35-9004-2012-00-31-50	Signage, Circular plate - PULL, SS 304, Box	PC	SSM	SS 304	BOX	50
35-9004-2021-00-31-50	Signage, Circular plate - FIRE DOOR, SS 304, Box	PC	SSM	SS 304	BOX	50

Signage and plates
Circular symbol signage

Specifications:
- Circular symbols
- Stainless steel AISI 304
- Size Ø76 x 1.5mm
- Engraved and painted

Features:
- Satin finish, other finishes available on request

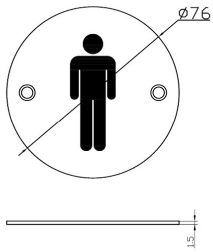

SKU	DESCRIPTION	UOM	FIN	MAT	PKG	WGT
35-9004-2032-00-31-50	Signage, Circular plate - FEMALE, SS 304, Box	PC	SSM	SS 304	BOX	50
35-9004-2031-00-31-50	Signage, Circular plate - MALE, SS 304, Box	PC	SSM	SS 304	BOX	50
35-9004-2033-00-31-50	Signage, Circular plate - DISABLED, SS 304, Box	PC	SSM	SS 304	BOX	50

Signage and plates
Door plates

Specifications:
- Protective push and kick plates
- Stainless steel AISI 304
- Standard size 300x100x1.5mm, plain or “PUSH” engraved,
- Special sizes available on request
- Countersunk fixing holes

Features:
- Satin finish, other finishes on request

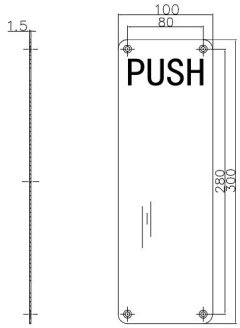

SKU	DESCRIPTION	UOM	FIN	MAT	PKG	WGT
35-9004-2101-00-31-50	Door push plate - Plane, 300X100X1.5mm, SS 304, Box	PC	SSM	SS 304	BOX	90
35-9004-2102-00-31-50	Door push plate - PUSH, 300X100X1.5mm, SS 304, Box	PC	SSM	SS 304	BOX	100

Escutcheons
Cylinder escutcheon pull

Specifications:
- Euro cylinder escutcheon pull
- Stainless steel AISI 304
- Size 50x95mm, protrusion 26mm from door

Features:
- Satin finish, other finishes on request

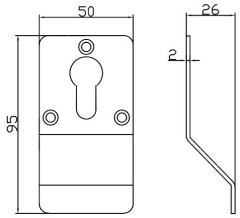

SKU	DESCRIPTION	UOM	FIN	MAT	PKG	WGT
35-9004-5021-00-31-50	Euro cylinder escutcheon pull, SS 304, Box	PC	SSM	SS 304	BOX	40

Escutcheons
Euro cylinder escutcheon

Specifications:
- Stainless steel AISI 304 cover
- Stainless steel base
- Size Ø54x8mm

Features:
- Satin finish, other finishes on request

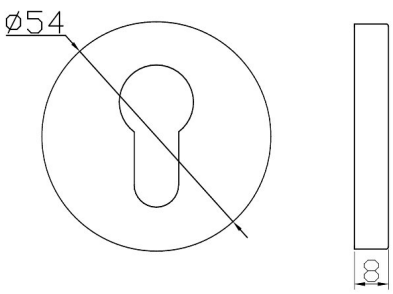

SKU	DESCRIPTION	UOM	FIN	MAT	PKG	WGT
35-9004-5022-00-31-50	Euro cylinder escutcheon rouond, SS 304, Box	PR	SSM	SS 304	BOX	40

Bathroom accessories
Turn and indicator

Specifications:
- Bathroom turn and indicator set
- Stainless steel AISI 304
- Rosette size Ø54x8mm
- Square 8x8mm spindle to suit doors up to 50mm thick

Features:
- Satin finish, other finishes on request
- Suitable for use with Yale mortice bolt item reference 35-9004-4101-00-31-50

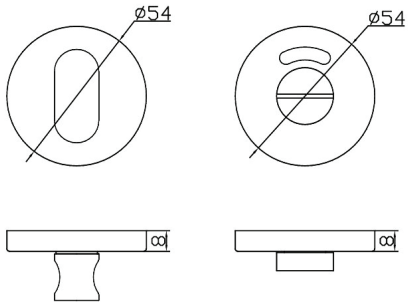

SKU	DESCRIPTION	UOM	FIN	MAT	PKG	WGT
35-9004-4002-00-31-50	Snib release indicator lock, with long handle- for high pressure laminate doors, Suitable for use with Yale mortice bolt item reference 35-9004-4101-00-31-50, SS 304, SSM, Box	PR	SN	SS 304	BOX	250

Bathroom accessories
Long turn and indicator set

Specifications:
- Bathroom set with long turn and indicator.
- Stainless steel AISI 304
- Rosette size Ø54x8mm
- Square 8x8mm spindle to suit doors up to 50mm thick

Features:
- Satin finish, other finishes on request
- Suitable for use with Yale mortice bolt item reference 35-9004-4101-00-31-50

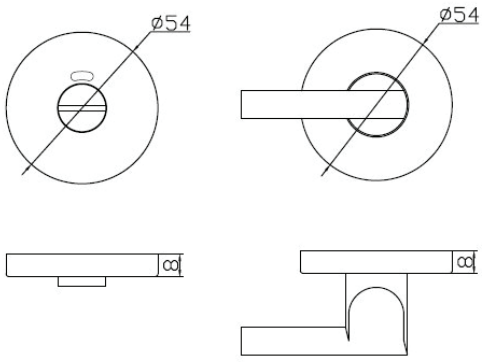

SKU	DESCRIPTION	UOM	FIN	MAT	PKG	WGT
35-9004-4001-00-31-50	Snib release indicator lock - for high pressure laminate doors, Suitable for use with Yale mortice bolt item reference 35-9004-4101-00-31-50, SS 304, SSM, Box	PR	SN	SS 304	BOX	250

Bathroom accessories

Mortice bolt for bathroom sets

Specifications:
- Mortice deadbolt for use with bathroom turn and indicator sets
- Stainless steel front and strike plate
- Front plate 76x22.5mm
- Follower suitable for 8x8mm spindle
- Backset 57mm, case depth 77mm

Features:
- Satin finish, other finishes on request

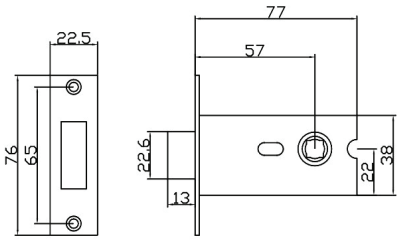

SKU	DESCRIPTION	UOM	FIN	MAT	PKG	WGT
35-9004-4101-00-31-50	Mortice deadbolt for bathroom sets, BS 57mm, Forend 22.5mm, SS 304, Box	PC	SN	SS 304	BOX	300

Door bolts

PM444 - Door security bolt

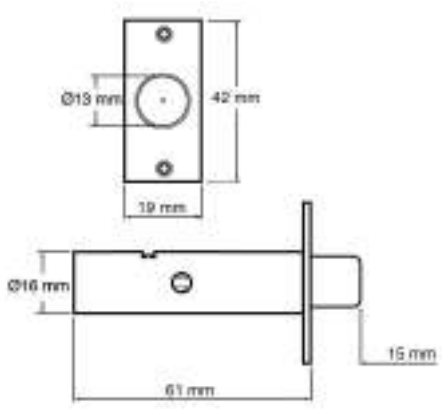

Specifications:

- Additional security, ideal for back doors
- Lock can only be operated from inside mortice fixings with bolt throwing into door frame
- Lock concealed within the door, so not visible from outside

Features:

- Available in chrome, white and polished brass

SKU	DESCRIPTION	UOM	FIN	MAT	PKG	WGT
P-M444-WH	Door security bolt, for back doors, only one side access, Brass, SC, Box	SET	SATIN CHROME	BRASS	BOX	50
P-M444-WE	Door security bolt, for back doors, only one side access, Brass, WE, Box	SET	WHITE	BRASS	BOX	50
P-M444-PB	Door security bolt, for back doors, only one side access, Brass, PB, Box	SET	PB	BRASS	BOX	50
P-M444KB	Door security bolt Key, Box	SET	SN	BRASS	BOX	50
PM44T-PB PM44T	Door security bolt, for back doors, only one side access, Brass, PB, Box	SET	PB	BRASS	BOX	50
PM44T-WH PM44T	Door security bolt, for back doors, only one side access, Brass, WH, Box	SET	WHITE	BRASS	BOX	50
P-2PM444-WH-2	Door security bolt, for back doors, only one side access, Brass, WH, Box	SET	WHITE	BRASS	BOX	50
P-2PM444-WE-2	Door security bolt, for back doors, only one side access, Brass, WE, Box	SET	WHITE	BRASS	BOX	50
P-2PM444-PB-2	Door security bolt, for back doors, only one side access, Brass, PC, Box	SET	PC	BRASS	BOX	50
P-2PM444KB	Door security bolt Key, Box	SET	SN	BRASS	BOX	50

Door bolts

P124 - Multi purpose door bolt

Specifications:
- Surface fixed bolt suitable for both aluminium sliding doors and flush wooden doors
- Offers additional security to internal and external doors

Features:
- Available in chrome, white and polished brass

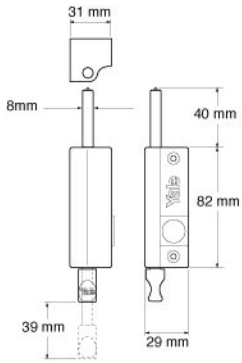

SKU	DESCRIPTION	UOM	FIN	MAT	PKG	WGT
P-124-PB	Mutli purpose door bolt, Polish brass, Box	SET	PB	ZA	BOX	50
P-124-WH	Mutli purpose door bolt, Polish Chrome, Box	SET	PC	ZA	BOX	50
P-124-WE	Mutli purpose door bolt, White, Box	SET	WHITE	ZA	BOX	50

Door guards

18L Door guard

Specifications:
- Zinc alloy door guard

Features:
- Available in satin chrome and polished brass

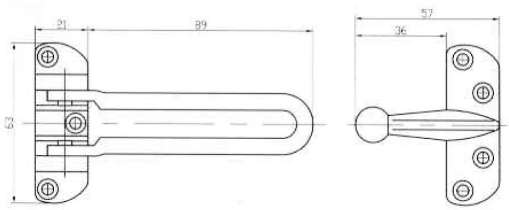

SKU	DESCRIPTION	UOM	FIN	MAT	PKG	WGT
V-18L-US3	Door guard, PB, Box	PC	PB	ZA	BOX	60
V-18L-US26	Door guard, DC, Box	PC	SC	ZA	BOX	60

Door viewers
0401A

Specifications:
- Adjustable to fit door thickness 35mm - 57mm
- Wide range angle view 180 Degrees
- Helps identify callers before opening the door
- Suitable for wooden external doors

Features:
- Available in polished chrome and polished brass

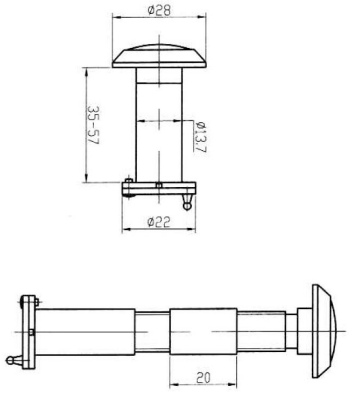

SKU	DESCRIPTION	UOM	FIN	MAT	PKG	WGT
V-0401-US3	Door viewer, 180degree view angle, Dr. Tk35-57mm, PB, Blister	PC	PB	BRASS	BLISTER	75
B-0401-US3	Door viewer, 180degree view angle, Dr. Tk35-57mm, PB, Box	PC	PB	BRASS	BOX	75
V-0401-US26	Door viewer, 180degree view angle, Dr. Tk35-57mm, PC, Blister	PC	CP	BRASS	BLISTER	75
B-0401-US26	Door viewer, 180degree view angle, Dr. Tk35-57mm, PC, Box	PC	CP	BRASS	BOX	75

Door chains
P1037

Specifications:
- Helps identify a caller before the door is fully released
- Simple to install
- Surface fitted security accessory

Features:
- Available in chrome and polished brass

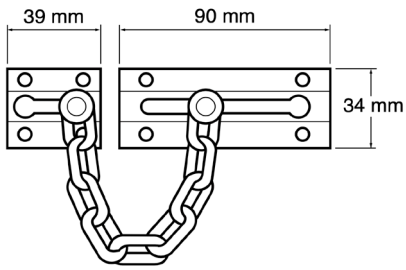

SKU	DESCRIPTION	UOM	FIN	MAT	PKG	WGT
P1037 - PB	Door Chian, PB, Box	PC	PB	BRASS	BOX	50
P1037 - CH	Door Chian, SC, Box	PC	SC	BRASS	BOX	50

Door holders
0A8

Specifications:
- Aluminium door holders

Features:
- Available in aluminium, gold and dark brown finishes

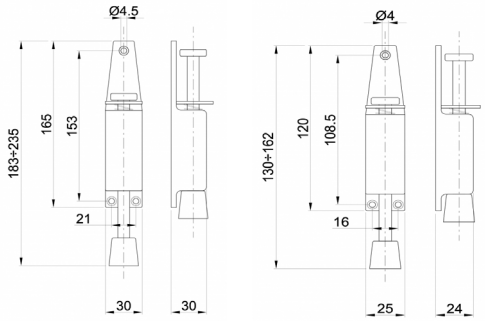

SKU	DESCRIPTION	UOM	FIN	MAT	PKG	WGT
0A83003057	Foot operated door stopper, Small, Aluminium, Box	PC	Alu	ZA	BOX	250
0A83003058	Foot operated door stopper, Small, Gold, Box	PC	Gold	ZA	BOX	250
0A83003056	Foot operated door stopper, Small, Brown, Box	PC	Brown	ZA	BOX	250
0A83004057	Foot operated door stopper, Large, Aluminium, Box	PC	Alu	ZA	BOX	250
0A83004058	Foot operated door stopper, Large, Gold, Box	PC	Gold	ZA	BOX	250
0A83004056	Foot operated door stopper, Large, Brown, Box	PC	Brown	ZA	BOX	250

Other fittings
Hat and coat hook

Specifications:
- Coat hook with rubber buffer
- Stainless steel AISI 304
- Size 70x63x20mm

Features:
- Satin finish, other finishes on request

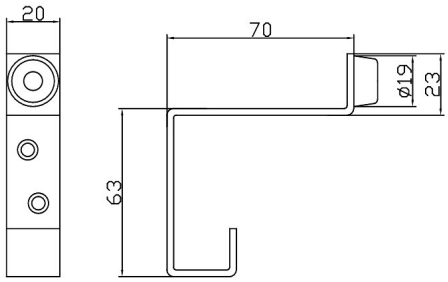

SKU	DESCRIPTION	UOM	FIN	MAT	PKG	WGT
35-9004-5001-00-31-50	Coat & Hat hook, SSM, Box	PC	SSM	SS 304	BOX	110

Other fittings
Dust proof socket

Specifications:
- Sprung floor socket for flush bolt
- Stainless steel AISI 304
- Depth 40mm, Ø25mm
- Suitable for bolt Ø12mm

Features:
- Satin finish, other finishes on request

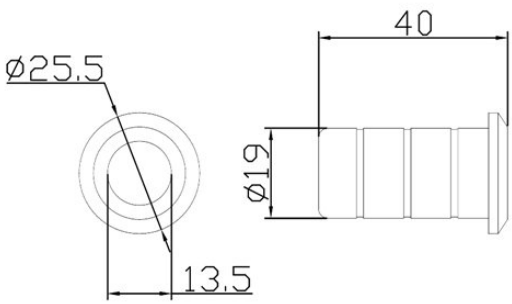

SKU	DESCRIPTION	UOM	FIN	MAT	PKG	WGT
35-9004-5002-00-31-50	Dust proof socket, SSM, Box	PC	SSM	SS 304	BOX	130

Other fittings
Mortice roller catch

Specifications:
- Roller catch and strike plate
- Front plate 89x20mm
- Case depth 21mm, height 51mm

Features:
- Satin finish, other finishes on request

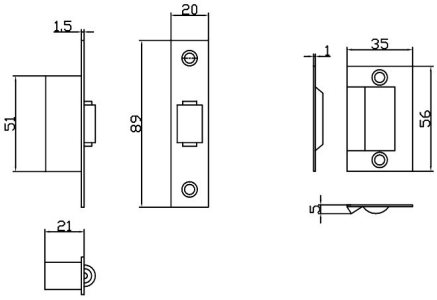

SKU	DESCRIPTION	UOM	FIN	MAT	PKG	WGT
35-9004-5202-00-31-50	Mortice roller catch, FR 20mm, CASE 21x51mm, SSM, Box	PC	SSM	SS 304	BOX	210

Cabinet Locks

Locks for wooden wardrobes and drawers

Furniture lock 820/830

Specifications:

- Brass body
- 2 nickel-plated brass keys
- 820 series is the mortice version
- 830 series is the rim version

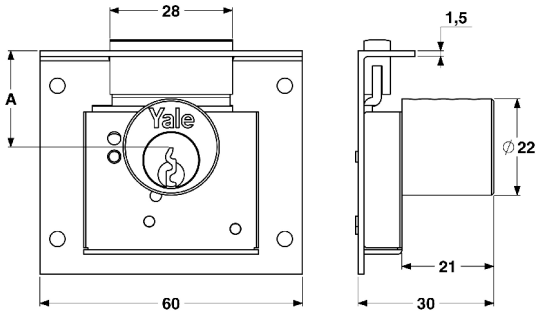

CODE	A	P	K
8200025	25mm	5	01013001
8200030	30mm	5	01013002
8200035	35mm	5	01013003
8200040	40mm	5	01013004
8300025	25mm	5	01013001
8300030	30mm	5	01013002
8300035	35mm	5	01013003
8300040	40mm	5	01013004

SKU	DESCRIPTION	UOM	FIN	MAT	PKG	WGT
8200025	Furniture lock, throws = 1 Box Brass	PC	BRASS	BRASS	BOX	171
8200030	Furniture lock, throws = 2 Box Brass	PC	BRASS	BRASS	BOX	189
8200035	Furniture lock, throws = 2 Box Brass	PC	BRASS	BRASS	BOX	195
8200040	Furniture lock, throws = 2 Box Brass	PC	BRASS	BRASS	BOX	201
8300025	Furniture lock, throws = 1 Box Nickelplated steel	PC	BRASS	BRASS	BOX	180
8300030	Furniture lock, throws = 2 Box Nickelplated steel	PC	BRASS	BRASS	BOX	203
8300035	Furniture lock, throws= 2 Box Nickelplated steel	PC	BRASS	BRASS	BOX	207
8300040	Furniture lock, throws = 2 Box Nickelplated steel	PC	BRASS	BRASS	BOX	214

Locks for wooden wardrobes and drawers

Furniture lock 834/835

Specifications:
- Brass body
- 2 nickel-plated brass keys
- 360° rotation, extraction only in close position

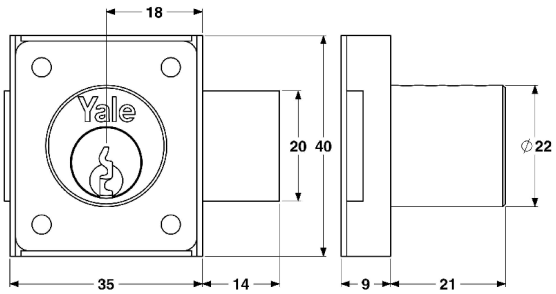

CODE	P	K
8340015	4	01010001
8350015	4	01010001

SKU	DESCRIPTION	UOM	FIN	MAT	PKG	WGT
8340015	Furniture lock, throws = 1 Box Brass-plated steel	PC	BRASS	BRASS	BOX	113
8350015	Furniture lock, throws = 1 Box Brass-plated steel	PC	BRASS	BRASS	BOX	113

New Locks for wooden wardrobes and drawers

Furniture lock 555B

Specifications:
- Brass body
- 2 nickel-plated brass keys
- 360° rotation, extraction only in close position

SKU	DESCRIPTION	UOM	FIN	MAT	PKG	WGT
555B	Furniture lock, Solid brass plug and cylinder, 4 pins20 mm length cylinder For cabinets and furniture 2 key, Satin Brass, Box	PC	Satin Brass	BRASS	BOX	207

Locks for wooden wardrobe and drawers

Furniture lock 850

Specifications:

- 2 nickel-plated brass keys

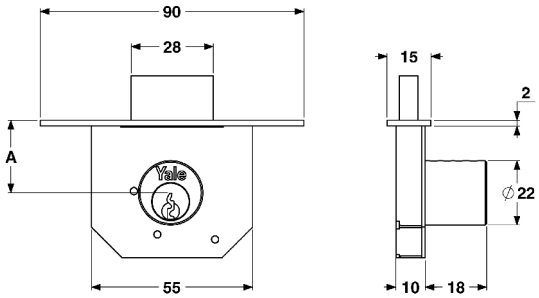

CODE	A	P	K
8500025	25mm	4	010110001
8500030	30mm	4	01010001
8500035	35mm	4	01010001
8500040	40mm	4	01010001

SKU	DESCRIPTION	UOM	FIN	MAT	PKG	WGT
8500025	850 Series, Furniture lock, throws = 1, Box NickelplatedSteel	PC	BRASS	BRASS	BOX	193
8500030	850 Series, Furniture lock, throws = 2, Box NickelplatedSteel	PC	BRASS	BRASS	BOX	213
8500035	850 Series, Furniture lock, throws = 2, Box NickelplatedSteel	PC	BRASS	BRASS	BOX	220
8500040	850 Series, Furniture lock, throws = 2, Box NickelplatedSteel	PC	BRASS	BRASS	BOX	230

Universal cylinders for metal cabinets

890 Universal Ø20mm, rotation 90° right

Specifications:
- Brass body
- 2 nickel-plated brass keys
- Cam lock, key removable in locked position only

Features:
- Available with left or right rotation 90° on request

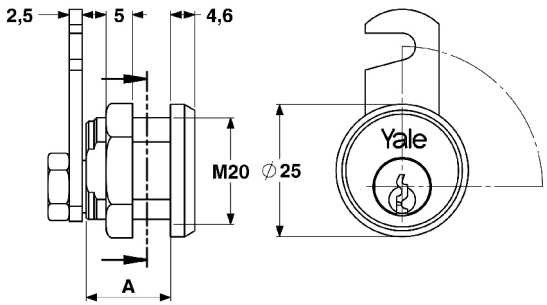

CODE	A	P	K
8900016	16mm	4	01010001
8900020	20mm	5	01013001
8900025	25mm	5	01013001
8900030	30mm	5	01013001
8900016001	16mm	4	01010001
8900020001	20mm	5	01013001
8900025001	25mm	5	01013001
8900030001	30mm	5	01013001

SKU	DESCRIPTION	UOM	FIN	MAT	PKG	WGT
8900016	890 Series, Universal cylinder, Box Nickelplated Brass	PC	BRASS	BRASS	BOX	86
8900020	890 Series, Universal cylinder, Box Nickelplated Brass	PC	BRASS	BRASS	BOX	95
8900025	890 Series, Universal cylinder, Box Nickelplated Brass	PC	BRASS	BRASS	BOX	106
8900030	890 Series, Universal cylinder, Box Nickelplated Brass	PC	BRASS	BRASS	BOX	117
8900016001	890 Series, Universal cylinder, Box Satin brass	PC	BRASS	BRASS	BOX	86
8900020001	890 Series, Universal cylinder, Box Satin brass	PC	BRASS	BRASS	BOX	95
8900025001	890 Series, Universal cylinder, Box Satin brass	PC	BRASS	BRASS	BOX	106
8900030001	890 Series, Universal cylinder, Box Satin brass	PC	BRASS	BRASS	BOX	116

Universal cylinders for metal cabinets

891 Universal Ø20mm, rotation 90° left

Specifications:
- Brass Body
- 2 nickel-plated brass keys
- Cam lock, key removable in locked position only

Features:
- Available with left or right rotation 90° on request

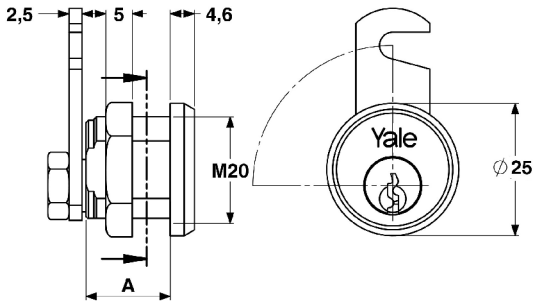

CODE	A	P	K
8910016	16mm	4	01010001
8910020	20mm	5	01013001
8910025	26mm	5	01013001
8910030	30mm	5	01013001
8910016001	16mm	4	01010001
8910020001	20mm	5	01013001
8910025001	25mm	5	01013001
8910030001	30mm	5	01013001

SKU	DESCRIPTION	UOM	FIN	MAT	PKG	WGT
8910016	891 Series, Universal cylinder, Box Nickelplated Brass	PC	BRASS	BRASS	BOX	86
8910020	891 Series, Universal cylinder, Box Nickelplated Brass	PC	BRASS	BRASS	BOX	95
8910025	891 Series, Universal cylinder, Box Nickelplated Brass	PC	BRASS	BRASS	BOX	106
8910030	891 Series, Universal cylinder, Box Nickelplated Brass	PC	BRASS	BRASS	BOX	117
8910016001	891 Series, Universal cylinder, Box Satin brass	PC	BRASS	BRASS	BOX	86
8910020001	891 Series, Universal cylinder, Box Satin brass	PC	BRASS	BRASS	BOX	95
8910025001	891 Series, Universal cylinder, Box Satin brass	PC	BRASS	BRASS	BOX	106
8910030001	891 Series, Universal cylinder, Box Satin brass	PC	BRASS	BRASS	BOX	117

Universal cylinders for metal cabinets

895 Universal Ø20mm, rotation 180°

Specifications:
- Brass Body
- 2 nickel-plated brass keys
- Cam lock, key removable in locked position only

Features:
- Available with left or right rotation 180° on request

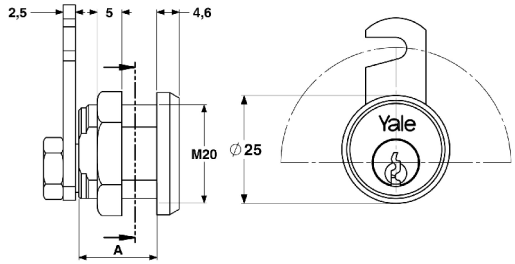

CODE	A	P	K
8950016	16mm	4	01010001
8950020	20mm	5	01013001
8950025	25mm	5	01013001
8950030	30mm	5	01013001
8950016001	16mm	4	01010001
8950020001	20mm	5	01013001
8950025001	25mm	5	01013001
8950030001	30mm	5	01013001

SKU	DESCRIPTION	UOM	FIN	MAT	PKG	WGT
8950016	895 Series, Universal cylinder, Box Nickelplated Brass	PC	BRASS	BRASS	BOX	86
8950020	895 Series, Universal cylinder, Box Nickelplated Brass	PC	BRASS	BRASS	BOX	95
8950025	895 Series, Universal cylinder, Box Nickelplated Brass	PC	BRASS	BRASS	BOX	106
8950030	895 Series, Universal cylinder, Box Nickelplated Brass	PC	BRASS	BRASS	BOX	117
8950016001	895 Series, Universal cylinder, Box Satin brass	PC	BRASS	BRASS	BOX	86
8950020001	895 Series, Universal cylinder, Box Satin brass	PC	BRASS	BRASS	BOX	95
8950025001	895 Series, Universal cylinder, Box Satin brass	PC	BRASS	BRASS	BOX	106
8950030001	895 Series, Universal cylinder, Box Satin brass	PC	BRASS	BRASS	BOX	116

Universal cylinders for metal cabinets

899 Furniture lock

Specifications:
- Brass Body
- Supplied with 2 keys
- Cam lock, key removable in locked position only

Features:
- Available with left or right rotation 180° on request

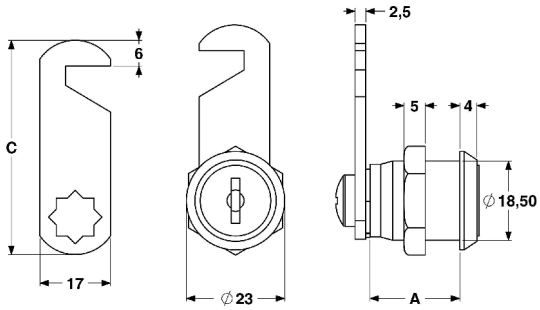

CODE	Ø	P	K
8990016	18.5mm	16mm	36mm
8990020	18.5mm	20mm	36mm
8990025	18.5mm	25mm	50mm
8990032	18.5mm	32mm	50mm

SKU	DESCRIPTION	UOM	FIN	MAT	PKG	WGT
8990016	899 Series, Universal cylinder, Box Nickelplated Brass	PC	BRASS	BRASS	BOX	65
8990020	899 Series, Universal cylinder, Box Nickelplated Brass	PC	BRASS	BRASS	BOX	65
8990025	899 Series, Universal cylinder, Box Nickelplated Brass	PC	BRASS	BRASS	BOX	65
8990032	899 Series, Universal cylinder, Box Nickelplated Brass	PC	BRASS	BRASS	BOX	65

Universal cylinders for metal cabinets

89049/89549 For special applications

Specifications:
- Brass body
- 2 nickel-plated brass keys
- Cam lock, key removable in locked position only
- Ø20mm rotation 90°/180° dx “

Features:
- Available in box
- Available with left and right rotation 90°

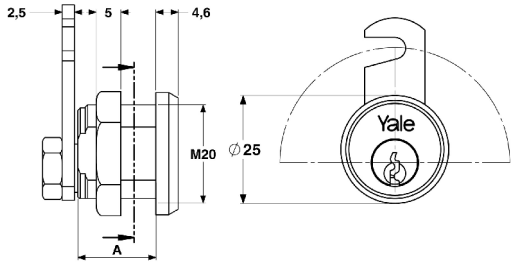

CODE	A	B	P	K
8904916	16mm	27.5mm	4	01010001
8904920	20mm	31.5mm	5	01013001
8904925	25mm	36.5mm	5	01013001
8904930	30mm	41.5mm	5	01013001
8954916	16mm	27.5mm	4	01010001
8954920	20mm	31.5mm	5	01013001
8954925	25mm	36.5mm	5	01013001
8954930	30mm	41.5mm	5	01013001

SKU	DESCRIPTION	UOM	FIN	MAT	PKG	WGT
8904916	8904 Series, 90° Clockwise rotation, Box Nickelplated Brass	PC	BRASS	BRASS	BOX	86
8904920	8904 Series, 90° Clockwise rotation, Box Nickelplated Brass	PC	BRASS	BRASS	BOX	95
8904925	8904 Series, 90° Clockwise rotation, Box Nickelplated Brass	PC	BRASS	BRASS	BOX	106
8904930	8904 Series, 90° Clockwise rotation, Box Nickelplated Brass	PC	BRASS	BRASS	BOX	117
8954916	8954 Series, 90° Clock and counterclockwise rotation, Box Nickelplated Brass	PC	BRASS	BRASS	BOX	86
8954920	8954 Series, 90° Clock and counterclockwise rotation, Box Nickelplated Brass	PC	BRASS	BRASS	BOX	95
8954925	8954 Series, 90° Clock and counterclockwise rotation, Box Nickelplated Brass	PC	BRASS	BRASS	BOX	106
8954930	8954 Series, 90° Clock and counterclockwise rotation, Box Nickelplated Brass	PC	BRASS	BRASS	BOX	117

Yale®

Safes

Fire safes

YFH/530/FG3 - Fire and security safe

Specifications:

- Up to 1 hour fire protection for documents
- High security lock with hardened steel plates protecting the mechanism from attack
- Four heavy duty locking bolts plus two back-end bolts protecting the hinge side
- Heavy duty hinges protected with 18mm fixed bolts
- Adjustable internal shelf
- Epoxy sealed shell of galvanised steel gives double rust protection
- Tested & accredited according to sold secure silver security standard
- Volume 49.4 Litres

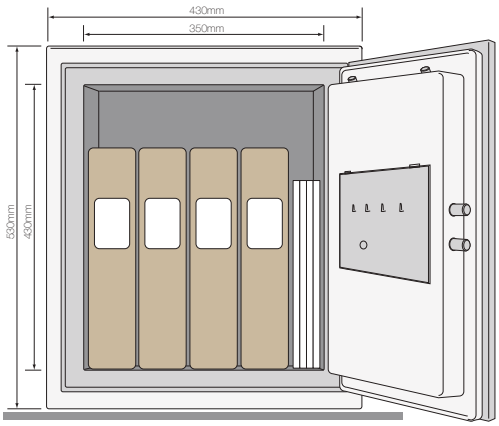

Features:

- Keypad illuminates when touched
- Re-settable 3–12 digit user code
- Programmable one-time user code - ideal for visiting guests who may need to use the safe for a short period
- Privacy number input – real code followed or preceded by random numbers opens the lock. Assists if you suspect your code is being observed by an onlooker
- Silent input – code can be entered without noise or light
- Time lock (if wrong code entered) can be set from 3 to 9 minutes (factory set 3 minutes)
- Lock-down period can be set from 1 to 48 hours. Safe can be shut down and cannot be activated for a given period

SKU	DESCRIPTION	UOM	FIN	MAT	PKG	WGT
YFH/530/FG3	Fire Safe security safe, 60Min FR, 49.4 Ltr, 530X430mm, CE, Black, Box	PC	BLACK	STEEL	BOX	64000

Fire safes

YFM/695/FG2 - XXL Professional document

Specifications:

- Up to 1.1/2 hour fire protection for documents
- Digital lock with touchpad interface
- Epoxy sealed shell of galvanised steel gives double rust protection
- High security electronic lock (over 1 billion combinations)
- Four locking bolts plus two back end bolts secure the hinges from attack
- Adjustable internal shelf
- Four wheels fitted to the base of the safe
- Volume 64 Litres

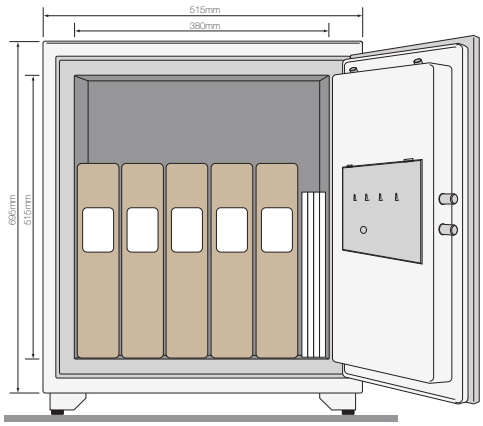

Features:

- Keypad illuminates when touched
- Re-settable 3 – 12 digit user code
- Programmable one-time user code - ideal for visiting guests who may need to use the safe for a short period
- Privacy number input – real code followed or preceded by random numbers opens the lock. Assists if you suspect your code is being observed by an onlooker
- Silent input – code can be entered without noise or light
- Time lock (if wrong code entered) can be set from 3 to 9 minutes (factory set 3 minutes)
- Lock-down period can be set from 1 to 48 hours. Safe can be shut down and cannot be activated for a given period - ideal if you are away and have other people entering property

SKU	DESCRIPTION	UOM	FIN	MAT	PKG	WGT
YFM/695/FG2	Fire Safe XXL Professional document, 90Min FR, 64 Ltr, 695x515mm, CE, Grey, Box	PC	GREY	STEEL	BOX	90000

Fire safes

YFM/520/FG2 - X-Large document

Specifications:

- Up to 1 hour fire protection for documents
- Digital lock with touchpad interface
- Epoxy sealed shell of galvanised steel gives double rust protection
- High security electronic lock (over 1 billion combinations)
- Back end bolts secure the hinges from attack
- Adjustable internal shelf
- Volume 36.9 Litres

Features:

- Keypad illuminates when touched
- Re-settable 3 – 12 digit user code
- Privacy number input – real code followed or preceded by random numbers opens the lock. Assists if you suspect your code is being observed by an onlooker
- Silent input – code can be entered without noise or light
- Time lock (if wrong code entered) can be set from 3 to 9 minutes (factory set 3 minutes)
- Lock-down period can be set from 1 to 48 hours. Safe can be shut down and cannot be activated for a given period - ideal if you are away and have other people entering property

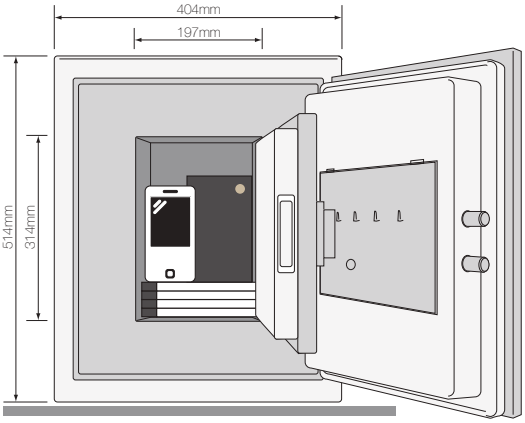

SKU	DESCRIPTION	UOM	FIN	MAT	PKG	WGT
YFM/520/FG2	Fire Safe - X-Large document, 60 Min FR, 36.9 Ltr, 520X350mm, CE, Grey, Box	PC	GREY	STEEL	BOX	53000

Fire safes

YFM/420/FG2 - Large document

Specifications:

- Up to 1 hour fire protection for documents
- Digital lock with touchpad interface
- Epoxy sealed shell of galvanised steel gives double rust protection
- High security electronic lock (over 1 billion combinations)
- Back end bolts secure the hinges from attack
- Adjustable internal shelf
- Volume 19 Litres

Features:

- Keypad illuminates when touched
- Re-settable 3 – 12 digit user code
- Privacy number input – real code followed or preceded by random numbers opens the lock. Assists if you suspect your code is being observed by an onlooker
- Silent input – code can be entered without noise or light
- Time lock (if wrong code entered) can be set from 3 to 9 minutes (factory set 3 minutes)
- Lock-down period can be set from 1 to 48 hours. Safe can be shut down and cannot be activated for a given period - ideal if you are away and have other people entering your property

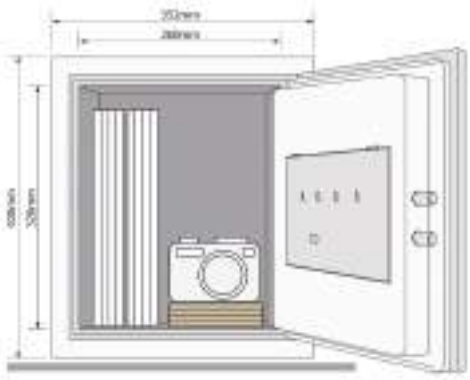

SKU	DESCRIPTION	UOM	FIN	MAT	PKG	WGT
YFM/420/FG2	Fire Safe- Large document, 60 Min FR, 19 Ltr, 420X352mm, CE, Grey, Box	PC	GREY	STEEL	BOX	36000

Certified safes

YSM/250/EG1- Home safe

Specifications:

- 22mm electronically motorised locking bolts
- User code and mastercode function
- 6 lever double bitted manual override lock
- 2 keys supplied
- Laser cut door for minimum gap
- Reinforced hinge and mounted door opening spring
- Armoured steel anti drill plates: Side of safe, top of safe & between door and faceplate
- Volume 18.6 litres

Features:

- Digital keypad with blue backlight LCD display
- Resettable 3 to 8 digit usercode
- Low battery warning
- Display code on/off function
- Internal light

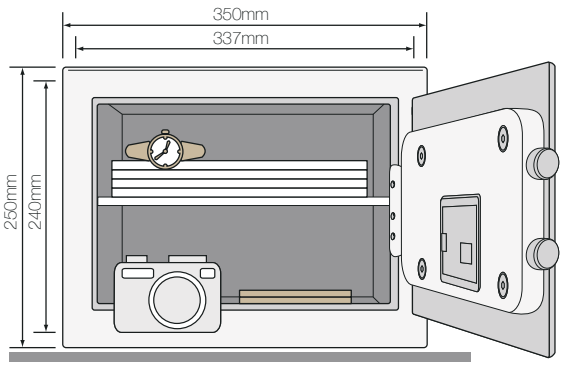

SKU	DESCRIPTION	UOM	FIN	MAT	PKG	WGT
YSM/250/EG1	Certified Home safe, 18.6 Ltr, 22mm electronically motorised locking bolts, 250X350mm, CE, Grey, Box	PC	GREY	STEEL	BOX	16000

Certified safes

YSM/400/EG1 - Office safe

Specifications:

- 22mm electronically motorised locking bolts
- User code and mastercode function
- 6 lever double bitted manual override lock
- 2 keys supplied
- Laser cut door for minimum gap
- Reinforced hinge and mounted door opening spring
- Armoured steel anti drill plates: Side of safe, top of safe & between door and faceplate
- Volume 35.5 litres

Features:

- Digital keypad with blue backlight LCD display
- Resettable 3 to 8 digit usercode
- Low battery warning
- Display code on/off function
- Internal light

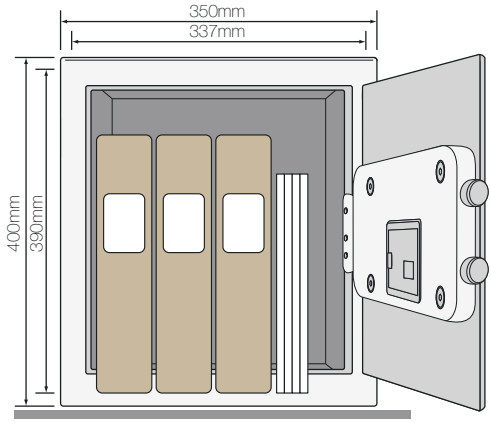

SKU	DESCRIPTION	UOM	FIN	MAT	PKG	WGT
YSM/400/EG1	Certified Office safe, 35.5 Ltr, 22mm electronically motorised locking bolts, 400X350mm, CE, Grey, Box	PC	GREY	STEEL	BOX	23000

Certified safes

YSM/520/EG1 - Professional safe

Specifications:
- 22mm electronically motorised locking bolts
- User code and mastercode function
- 6 lever double bitted manual override lock
- 2 keys supplied
- Laser cut door for minimum gap
- Reinforced hinge and mounted door opening spring
- Armoured steel anti drill plates: Side of safe, top of safe & between door and faceplate
- Volume 49.8 litres

Features:
- Digital keypad with blue backlight LCD display
- Resettable 3 to 8 digit usercode
- Low battery warning
- Display code on/off function
- Internal light

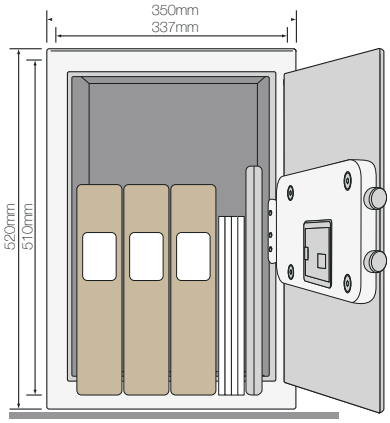

SKU	DESCRIPTION	UOM	FIN	MAT	PKG	WGT
YSM/520/EG1	Certified Professional safe, 49.8 Ltr, 22mm electronically motorised locking bolts, 520X350mm, CE, Grey, Box	PC	GREY	STEEL	BOX	29000

Security safes

YSB/200/EB1 - Compact safe

Specifications:
- 22mm electronically motorised locking bolts
- 6 lever double bitted manual override lock with two manual over-ride keys
- Laser cut door with minimum gap
- Reinforced hinge and mounted door opening spring
- Volume 9.6 litres

Features:
- Digital keypad with blue backlight LCD display
- Resettable 3 to 8 digit usercode
- Low battery warning
- Display code on/off function

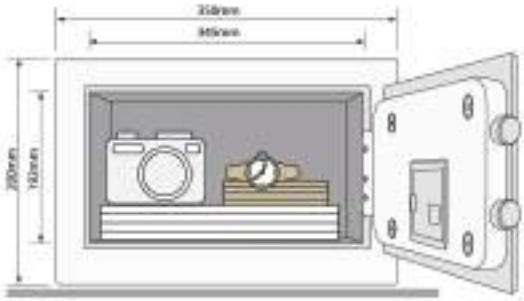

SKU	DESCRIPTION	UOM	FIN	MAT	PKG	WGT
YSB/200/EB1	SecurityCompact safe, 9.6 Ltr, 22mm electronically motorised locking bolts, 200X350mm, CE, Black, Box	PC	BLACK	STEEL	BOX	9000

Security safes
YSB/250/EB1 - Home safe

Specifications:
- 22mm electronically motorised locking bolts
- 6 lever double bitted manual override lock with two manual over-ride keys
- Laser cut door with minimum gap
- Reinforced hinge and mounted door opening spring
- Volume 20.5 litres

Features:
- Digital keypad with blue backlight LCD display
- Resettable 3 to 8 digit usercode
- Low battery warning
- Display code on/off function

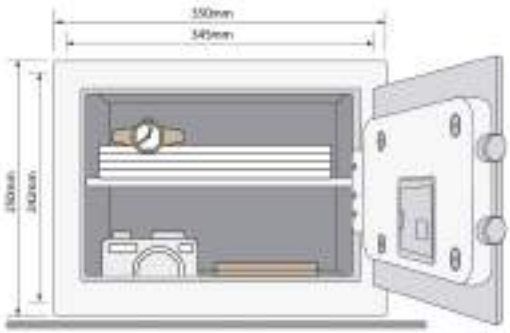

SKU	DESCRIPTION	UOM	FIN	MAT	PKG	WGT
YSB/250/EB1	Security Home safe, 20.5 Ltr, 22mm electronically motorised locking bolts, 250X350mm, CE, Black, Box	PC	BLACK	STEEL	BOX	12000

Security safes
YSB/400/EB1 - Office safe

Specifications:
- 22mm electronically motorised locking bolts
- 6 lever double bitted manual override lock with two manual over-ride keys
- Laser cut door with minimum gap
- Reinforced hinge and mounted door opening spring
- Volume 38.5 litres

Features:
- Digital keypad with blue backlight LCD display
- Resettable 3 to 8 digit usercode
- Low battery warning
- Display code on/off function

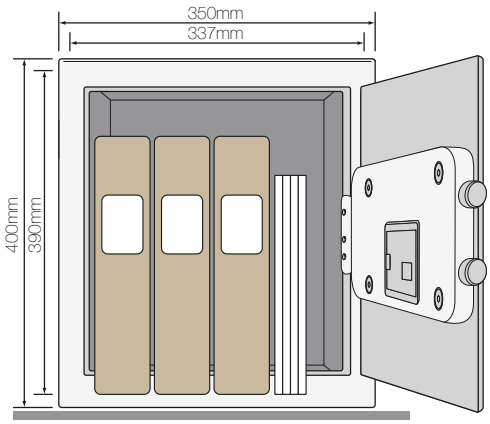

SKU	DESCRIPTION	UOM	FIN	MAT	PKG	WGT
YSB/400/EB1	Security Office safe, 38.5 Ltr, 22mm electronically motorised locking bolts, 400X350mm, CE, Black, Box	PC	BLACK	STEEL	BOX	17000

Security safes

YLB/200/EB1 - Laptop safe

Specifications:
- 22mm electronically motorised locking bolts
- 6 lever double bitted manual override lock with two manual over-ride keys
- Laser cut door with minimum gap
- Reinforced hinge and mounted door opening spring
- Volume 26.9 litres

Features:
- Digital keypad with blue backlight LCD display
- Resettable 3 to 8 digit usercode
- Low battery warning
- Display code on/off function

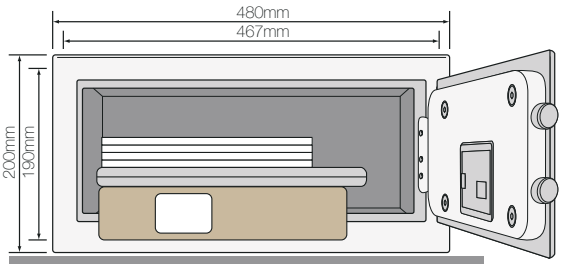

SKU	DESCRIPTION	UOM	FIN	MAT	PKG	WGT
YLB/200/EB1	Security Laptop safe, 26.9 Ltr, 22mm electronically motorised locking bolts, 200X480mm, CE, Black, Box	PC	BLACK	STEEL	BOX	14000

Value safes

YSV/200/DB1 - Value compact safe

Specifications:
- Simple to operate programmable keypad
- Supplied with two manual over-ride keys
- Steel construction pre-drilled holes with fixings supplied
- Volume 8.6 litres

Features:
- Simple keypad interface
- Opens with combination of 3 to 8 digits (10, 000 combinations)
- Two LED light indicators, green to open, red for error
- Low battery warning – red light will flash when entering the code
- Time Lock sets after 3 incorrect entries for 20 seconds and then 6 minutes after 6 consecutive times

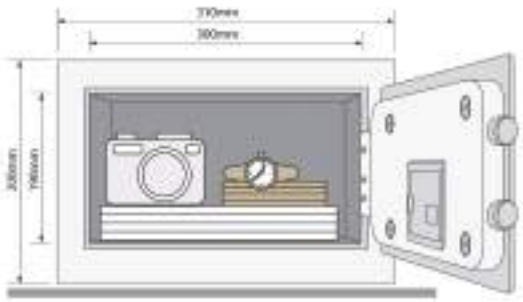

SKU	DESCRIPTION	UOM	FIN	MAT	PKG	WGT
YSV/200/DB1	ValueCompact safe, 8.6 Ltr, 200X310mm, CE, Black, Box	PC	BLACK	STEEL	BOX	5000

Value safes

YSV/250/DB1 - Value home safe

Specifications:
- Simple to operate programmable digital keypad
- Supplied with two manual over-ride keys
- Steel construction pre-drilled holes with fixing bolts included
- Volume 16.3 litres

Features:
- Simple keypad interface
- Opens with combination of 3 to 8 digits (10, 000 combinations)
- Two LED light indicators, green to open, red for error
- Low battery warning – red light will flash when entering the code
- Time Lock sets after 3 incorrect entries for 20 seconds and then 6 minutes after 6 consecutive times

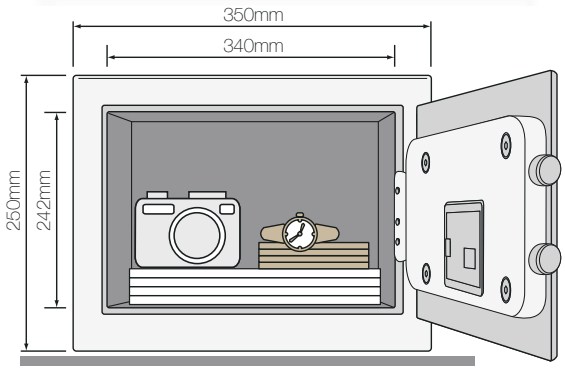

SKU	DESCRIPTION	UOM	FIN	MAT	PKG	WGT
YSV/250/DB1	ValueHome safe, 16.3 Ltr, 250X350mm, CE, Black, Box	PC	BLACK	STEEL	BOX	8000

Value safes

YSV/390/DB1 - Value office safe

Specifications:
- Simple to operate programmable digital keypad
- Supplied with two manual over-ride keys
- Steel construction pre-drilled holes with fixing bolts included
- Volume 40 litres

Features:
- Simple keypad interface
- Opens with combination of 3 to 8 digits (10, 000 combinations)
- Two LED light indicators, green to open, red for error
- Low battery warning – red light will flash when entering the code
- Time Lock sets after 3 incorrect entries for 20 seconds and then 6 minutes after 6 consecutive times

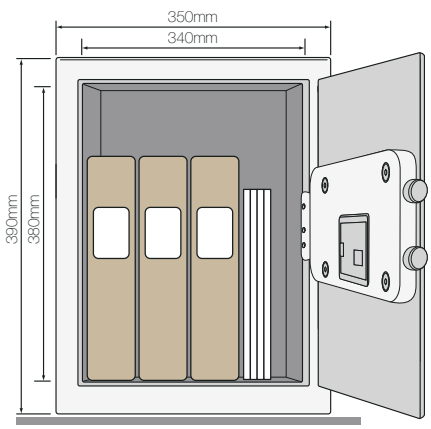

SKU	DESCRIPTION	UOM	FIN	MAT	PKG	WGT
YSV/390/DB1	ValueOffice safe, 40 Ltr, 300X350mm, CE, Black, Box	PC	BLACK	STEEL	BOX	14000

Value safes

YSV/695/DB1 - Extra large office solution safe

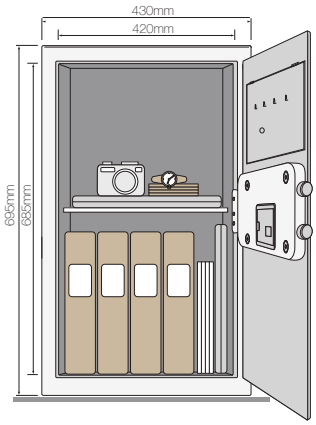

Specifications:
- Large size for home or office use
- Two manual over-ride keys
- Adjustable shelf to accomodate larger items
- Adjustable key racks for storage of up to 20 keys
- Steel construction pre-drilled holes with fixing bolts included
- Wide enough to store 17" laptop computer
- Volume 89.2 litres

Features:
- Simple to operate programmable digital keypad
- One touch re-set button

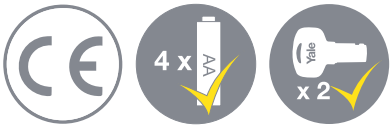

SKU	DESCRIPTION	UOM	FIN	MAT	PKG	WGT
YSV/695/DB1	ValueExtra large office solution safe, 89.2 Ltr, 695X430mm, CE, Black, Box	PC	BLACK	STEEL	BOX	8000

Value safes

YLV/200/DB1 - Value laptop safe

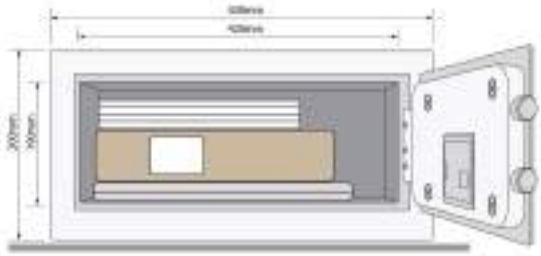

Specifications:
- Simple to operate programmable digital keypad
- Supplied with two manual over-ride keys
- Steel construction pre-drilled holes with fixing bolts included
- Volume 24 litres

Features:
- Simple keypad interface
- Opens with combination of 3 to 8 digits (10, 000 combinations)
- Two LED light indicators, green to open, red for error
- Low battery warning – red light will flash when entering the code
- Time Lock sets after 3 incorrect entries for 20 seconds and then 6 minutes after 6 consecutive times

SKU	DESCRIPTION	UOM	FIN	MAT	PKG	WGT
YLV/200/DB1	ValueLaptop safe, 24 Ltr, 200X430mm, CE, Black, Box	PC	BLACK	STEEL	BOX	9400

Guest safes

YSG/200/DB1 Guest safe small

Specifications:
- Ideal for homes, small guest houses and hotels
- Volume 8.6 litres

Features:
- Programmable user code function
- Guest House master code function
- LCD display with easy to operate 3 to 8 digit programmable user/guest code
- Time Lock - Safe locks down for 3 minutes after 4 wrong attempts
- Silent input option and secret input option
- Batteries positioned on the outside

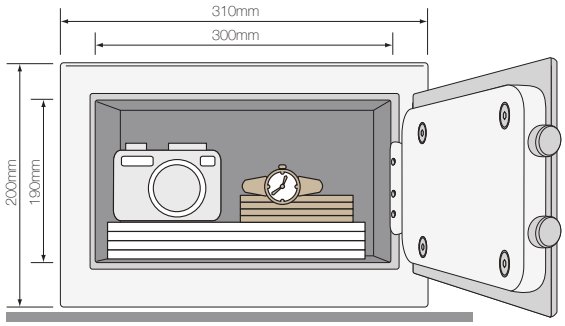

SKU	DESCRIPTION	UOM	FIN	MAT	PKG	WGT
YSG/200/DB1	GuestSafe small, 8.6 Ltr, 200X310mm, CE, Grey, Box	PC	GREY	STEEL	BOX	5400

Guest safes

YSG/250/DB1 Guest safe medium

Specifications:
- Ideal for homes, small guest houses and hotels
- Volume 16.3 litres

Features:
- Programmable user code function
- Guest House master code function
- LCD display with easy to operate 3 to 8 digit programmable user/guest code
- Time Lock - Safe locks down for 3 minutes after 4 wrong attempts
- Silent input option
- Secret input option
- Batteries positioned on the outside

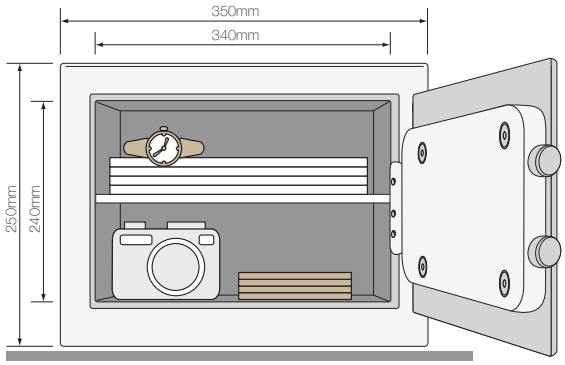

SKU	DESCRIPTION	UOM	FIN	MAT	PKG	WGT
YSG/250/DB1	GuestSafe medium, 16.3 Ltr, 250X350mm, CE, Black, Box	PC	BLACK	STEEL	BOX	8080

Guest safes

YLG/200/DB1 Guest safe laptop

Specifications:
- Ideal for homes, small guest houses and hotels
- Volume 24 litres

Features:
- Programmable user code function
- Guest House master code function
- LCD display with easy to operate 3 to 8 digit programmable user/guest code
- Time Lock - Safe locks down for 3 minutes after 4 wrong attempts
- Silent input option
- Secret input option
- Batteries positioned on the outside

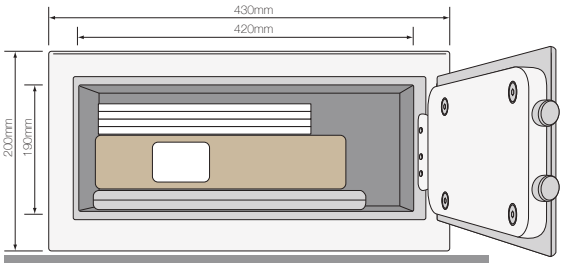

SKU	DESCRIPTION	UOM	FIN	MAT	PKG	WGT
YLG/200/DB1	GuestSafe laptop, 24 Ltr, 250X430mm, CE, Grey, Box	PC	GREY	STEEL	BOX	10400

Motorized safes

YSE - Motorized safes

Specifications:
- Ideal for homes, small guest houses and hotels
- Available in Small, Medium, Large and Laptop variants
- Spring loaded door with 16mm motorized locking bolts
- Emergency external 9V battery access
- Radial type cylinder, supplied with 2 manual over-ride keys

Features:
- LCD display with easy to operate 3 to 8 digit programmable user/guest code
- Includes user code and master code function
- One touch reset button inside the safe
- Time Lock - Safe locks down for 3 minutes after 4 wrong attempts

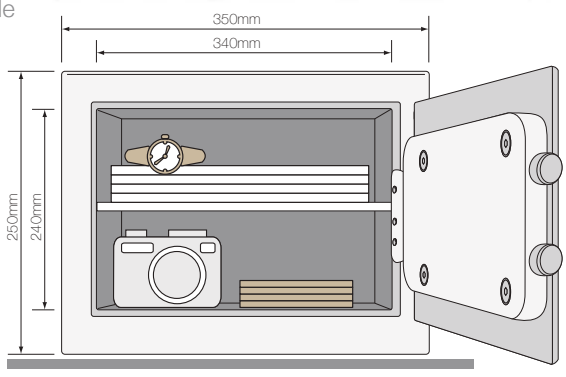

SKU	DESCRIPTION	UOM	FIN	MAT	PKG	WGT
YSE/200/EG4	Motorized safes, small: 200 x 310 x 200mm, CE, Grey, Box	PC	GREY	STEEL	BOX	6000
YSE/250/EG4	Motorized safes, medium: 250 x 350 x 250mm, CE, Grey, Box	PC	GREY	STEEL	BOX	8000
YSE/390/EG4	Motorized safes, large: 390 x 350 x 360mm, CE, Grey, Box	PC	GREY	STEEL	BOX	15000
YLE/200/EG4	Motorized safes, laptop: 200 x 480 x 350mm, CE, Grey, Box	PC	GREY	STEEL	BOX	11000

Tablet safes

YAV/108/DB1 - Tablet safe

Specifications:
- Electronic safe for storing Tablet PC or other small electronic devices
- Opens with either user code or manual over-ride key
- 2 keys supplied
- External Dimensions: H108xW250xD330mm
- Internal Dimensions: H98xW240xD300mm

Features:
- Simple Electronic keypad
- Resettable 3 to 8 digit usercode
- Low battery warning
- Includes external charging slot so that the tablet can be charged while securely locked away
- Supplied with a bracket for securing to a fixed object
- Or can be fixed underneath a desk through holes in the top of the safe

SKU	DESCRIPTION	UOM	FIN	MAT	PKG	WGT
YAV/108/DB1	Tablet safev, 108X250mm, CE, Grey, Box	PC	GREY	STEEL	BOX	4500

Wall safes

YWV/230/KB1

Specifications:
- Safe fits inside the wall
- Can be concealed behind a picture or mirror
- Double bitted manual override lock
- Steel internal hinge allows full door opening

Features:
- 2 keys supplied
- Includes a removable shelf

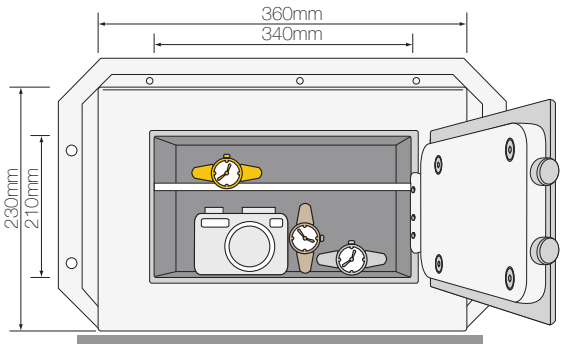

SKU	DESCRIPTION	UOM	FIN	MAT	PKG	WGT
YWV/230/KB1	Wall Safes, 230X360mm, CE, Black, Box	PC	BLACK	STEEL	BOX	8000

Cash & key boxes
Cash boxes

Specifications:
- Includes carry handle
- Internal tray to keep items organized

Features:
- Black finish
- Two sizes available

SKU	DESCRIPTION	UOM	FIN	MAT	PKG	WGT
YCB/080/BB2	Key boxes, Small: H80xW152xD118mm, Black, Box	PC	BLACK	STEEL	BOX	5000
YCB/090/BB2	Key boxesMedium: H90xW200xD160mm, Black, Box	PC	BLACK	STEEL	BOX	8000

Yale®

The world's favorite lock since **1843**

An ASSA ABLOY Group brand

ASSA ABLOY

PO Box: 37765, Jebel Ali Industrial Area 1, Dubai, UAE
+971 4 880 4888 • yaleme@assaabloy.com • www.yale.ae

Catalog 2020 - Version 1